PART# PW050127

PW050127 — MODULAR CANOPY FOR MAZDA BT-50 2020–2026

Before Installation

- Please read the instruction completely for easy installation, which will also help you to avoid scratches or other potential damages to your appealing car.
- The figures here are for reference only and may have differences with the actual product you received, however they share the same assembly way.

Care and Cleaning

- Mild soap may be used also to clean the Product.
- Please periodically check and retighten all the hardware and clean the investment for a refresh look.
-

Component

FRONT PART

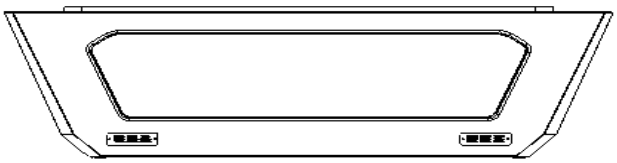

LEFT PART

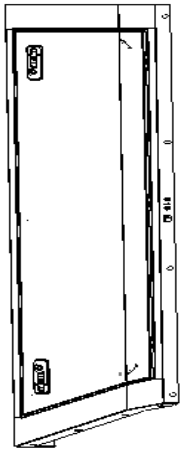

TOP PART

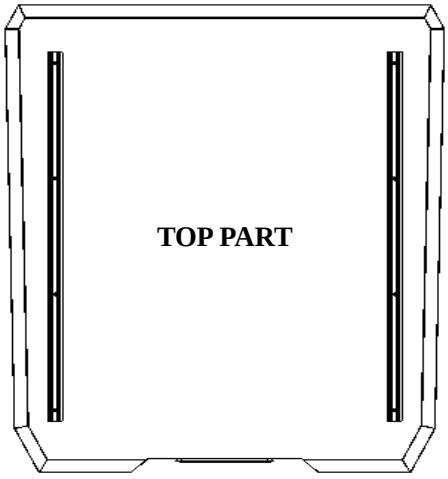

RIGHT PART

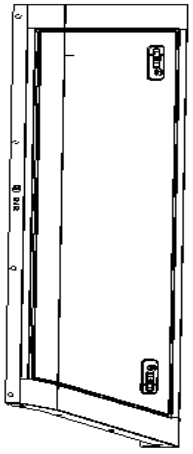

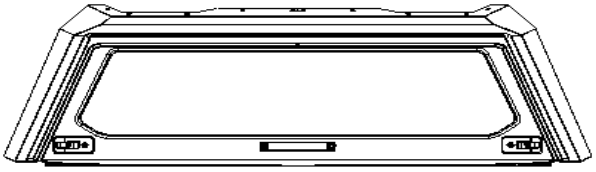

REAR PART

Fitting kit

HEX BOLT GROUP M8_25

X 36

SEAL RUBBER

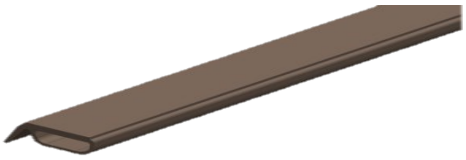

X 1

FRONT FOAM TAPE

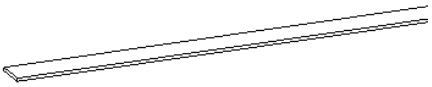

X 1

Tools

Rachet

Extensions

10mm Socket

10mm Wrench

Step 1

Open the package box and take out left part and top part. Match the installation hole of both left part edge and top part edge and then connect them by installing 4* hex bolt group M8_25.

*Don’t locking too tight at this step. Adjustment will be needed in the following steps.

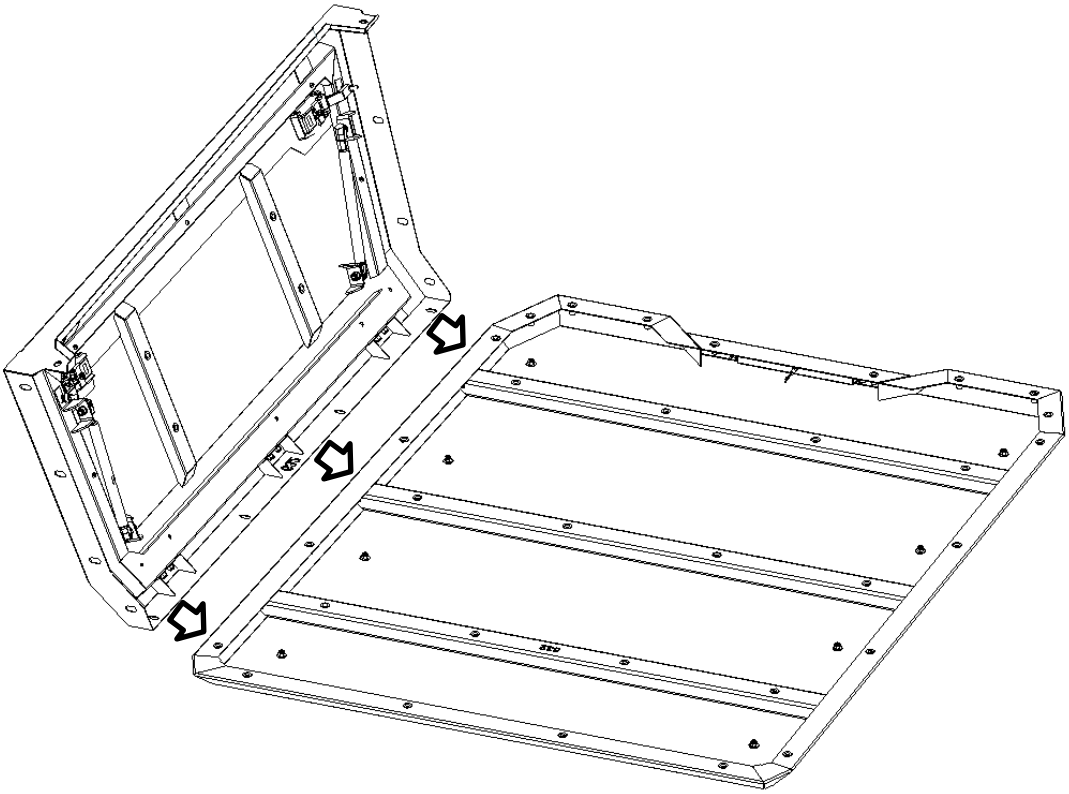

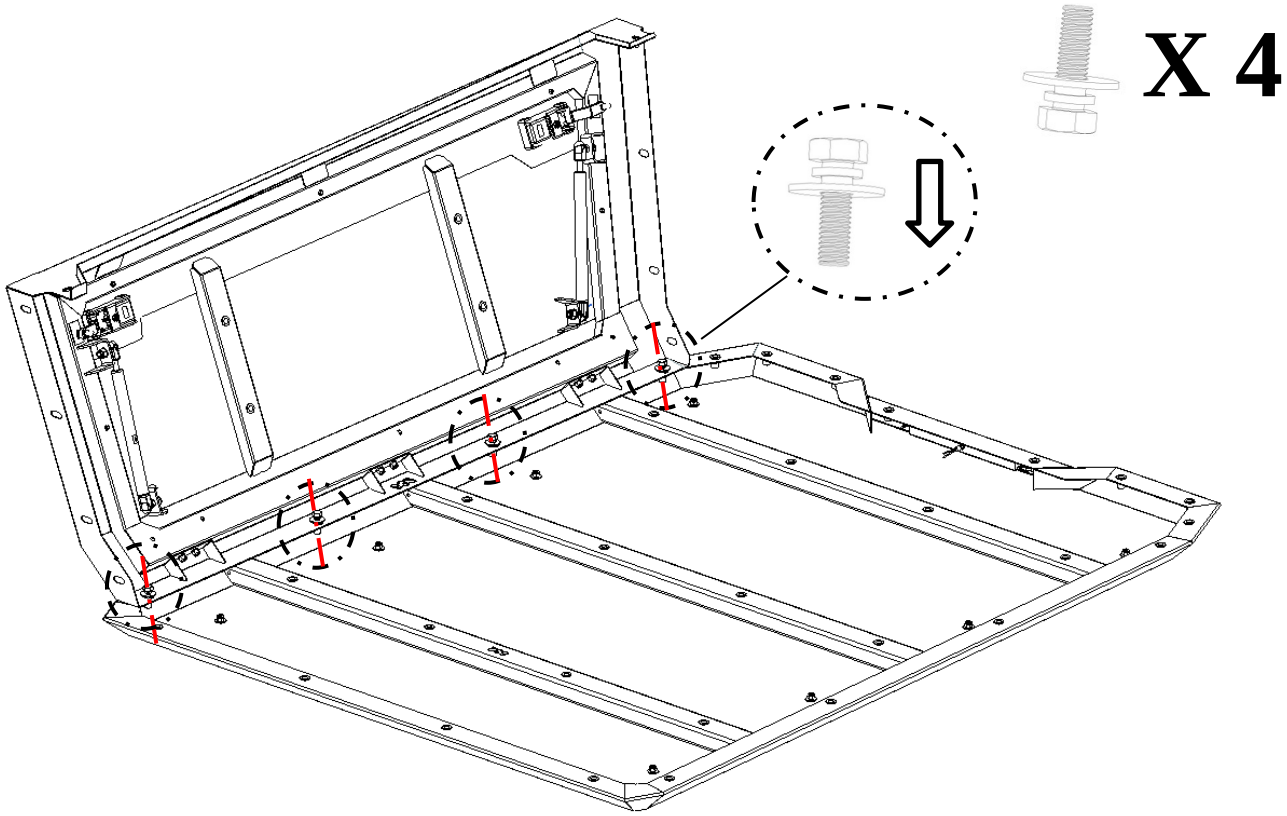

Step 2

Take out right part and top part. Match the installation hole of both right part edge and top part edge and then connect them by installing 4* hex bolt group M8_25.

*Don’t locking too tight at this step. Adjustment will be needed in the following steps.

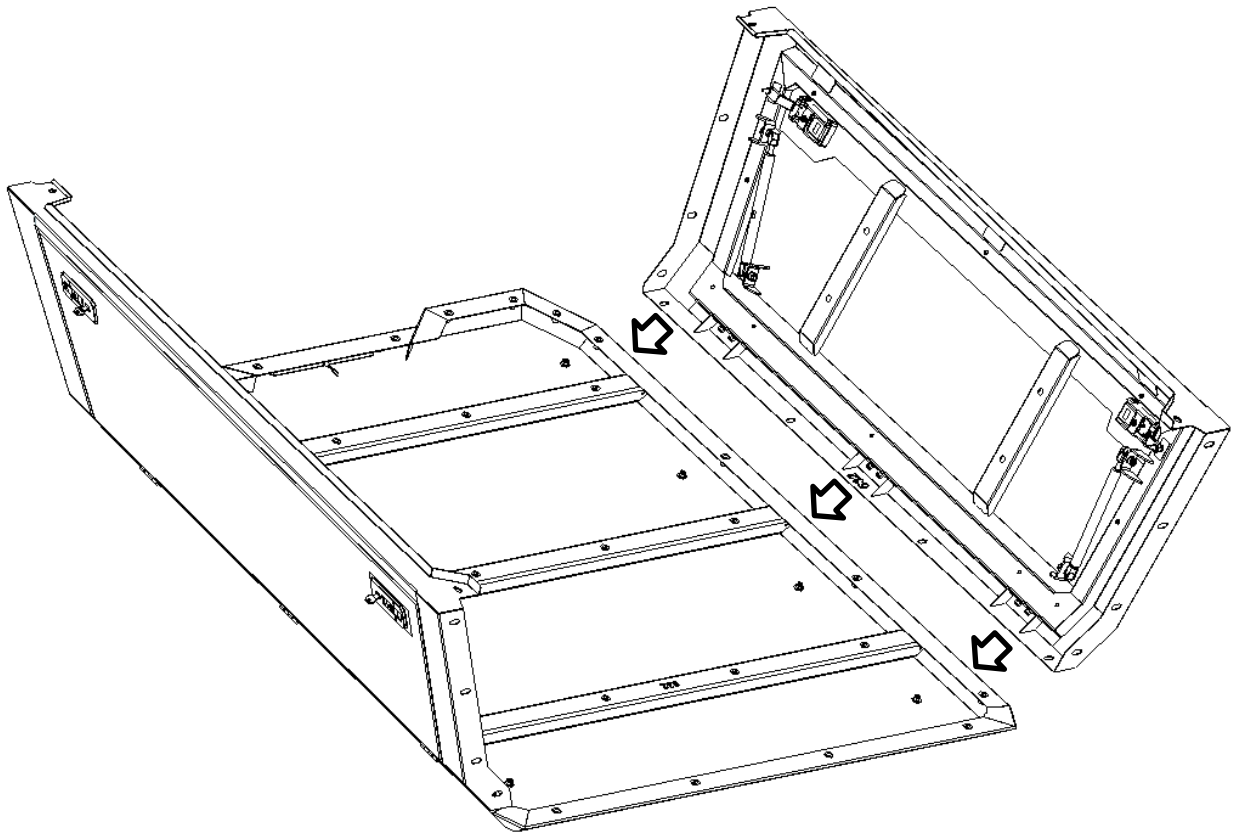

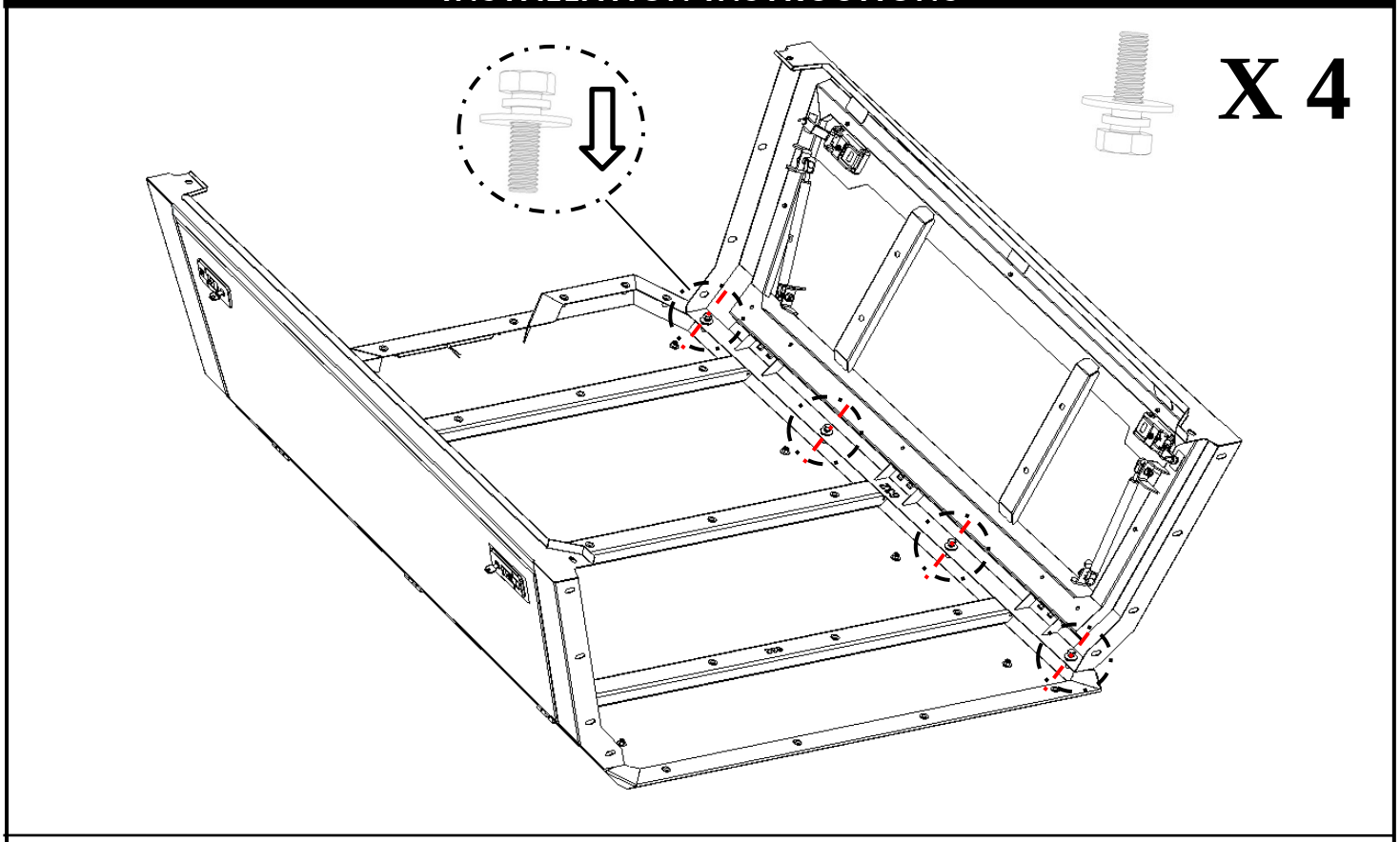

Step 3

Take out front part. Match the installation hole of left part edge, right part edge, top part edge and front part edge, and then connect them by installing 12* hex bolt group M8_25.

*Don’t locking too tight at this step. Adjustment will be needed in the following steps.

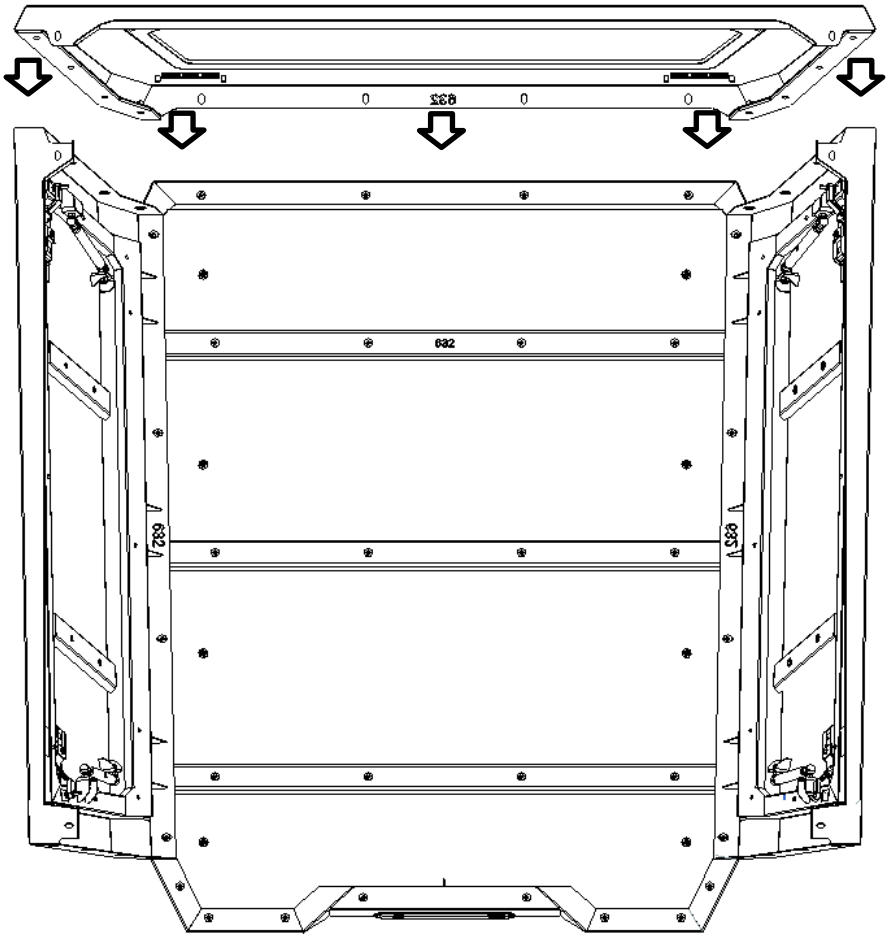

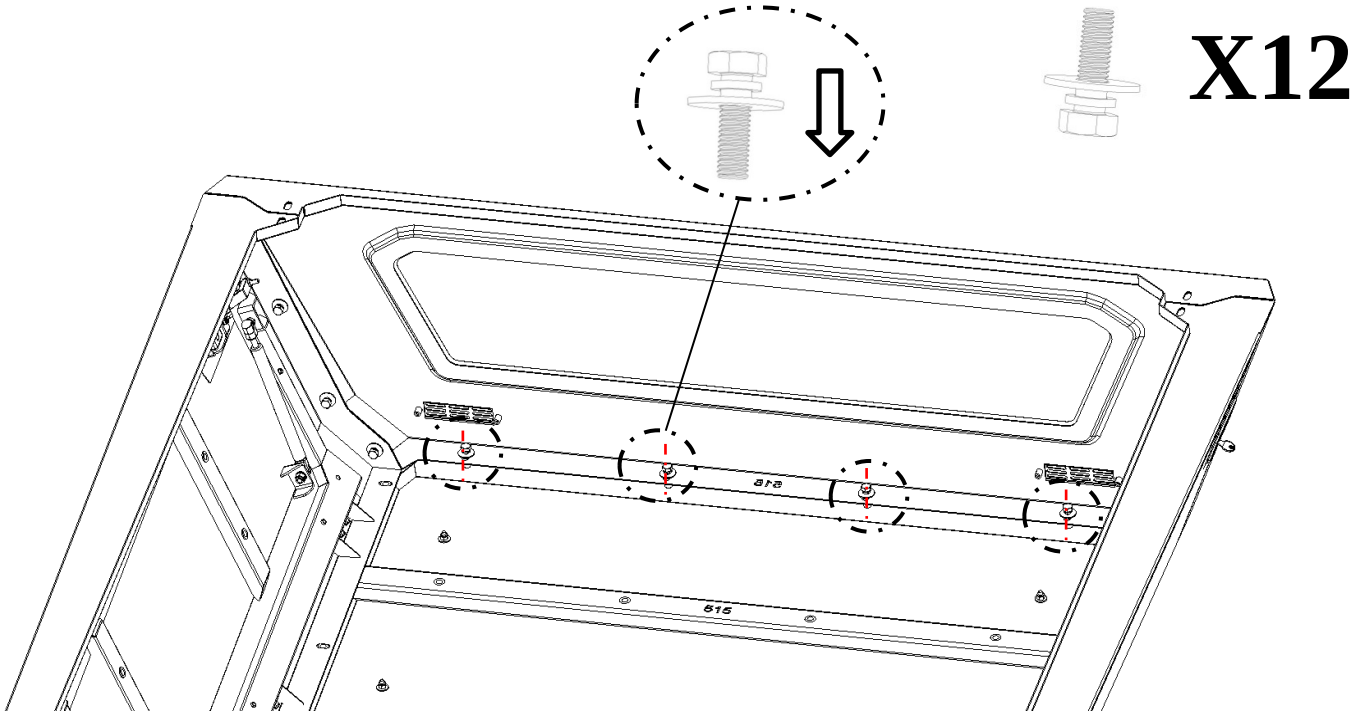
X12

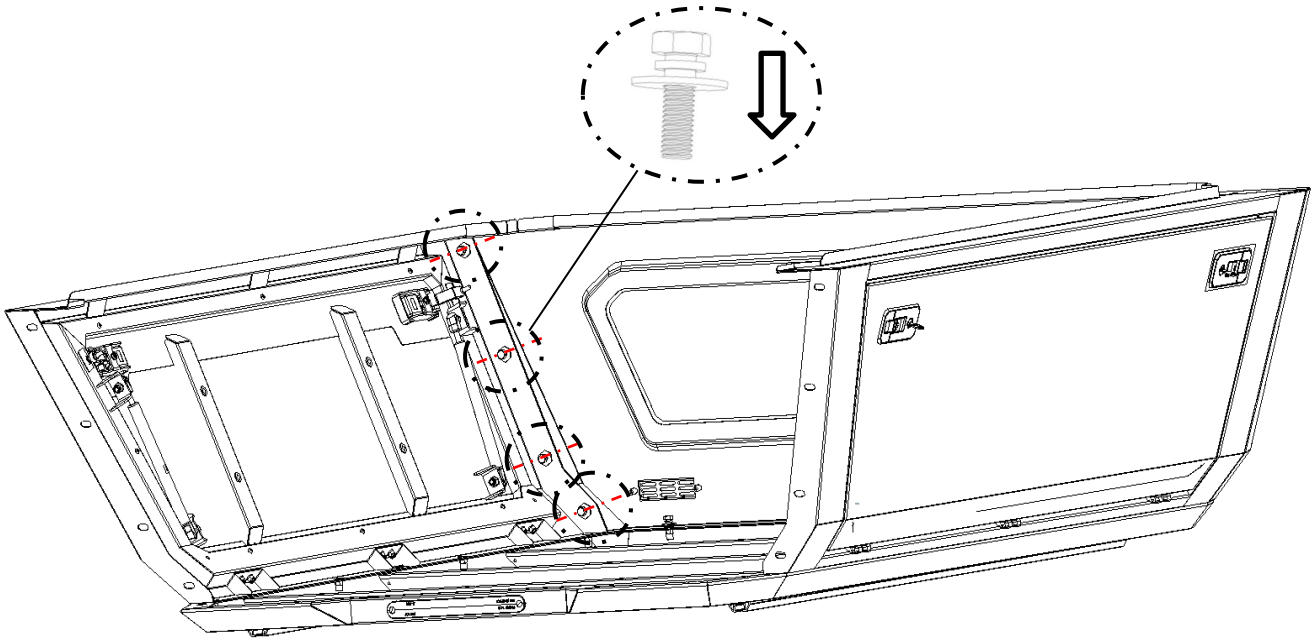

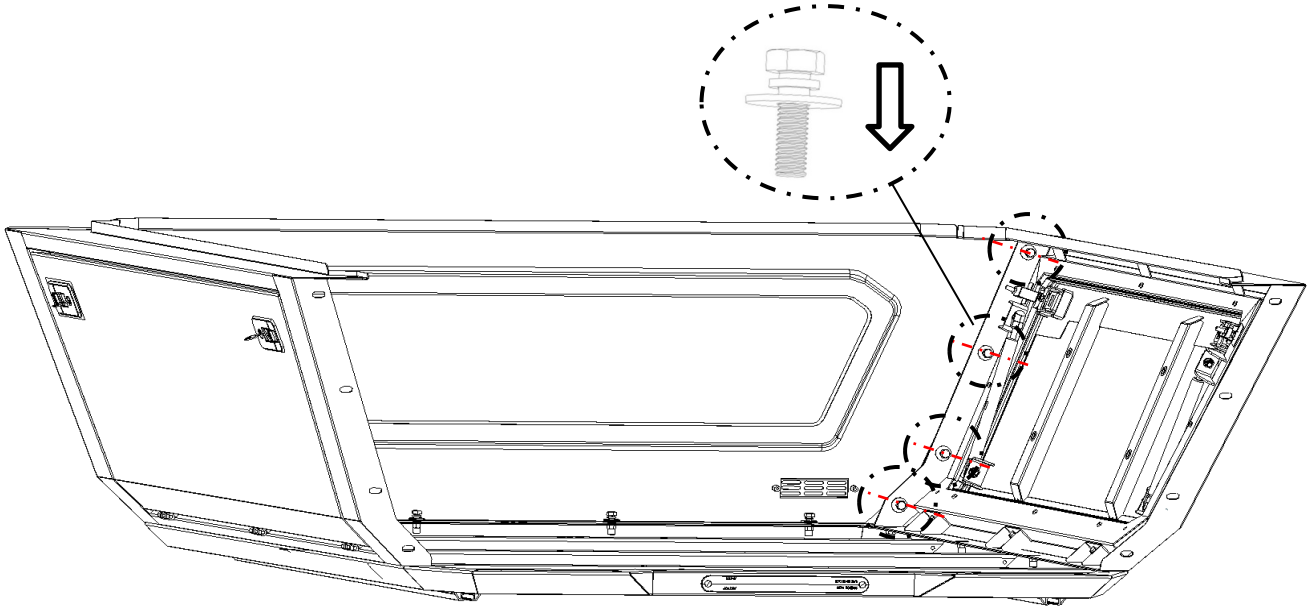

Step 4

Take out rear part. Match the installation hole of left part edge, right part edge, top part edge and rear part edge, and then connect them by installing 12* hex bolt group M8_25.

*Don’t locking too tight at this step. Adjustment will be needed in the following steps.

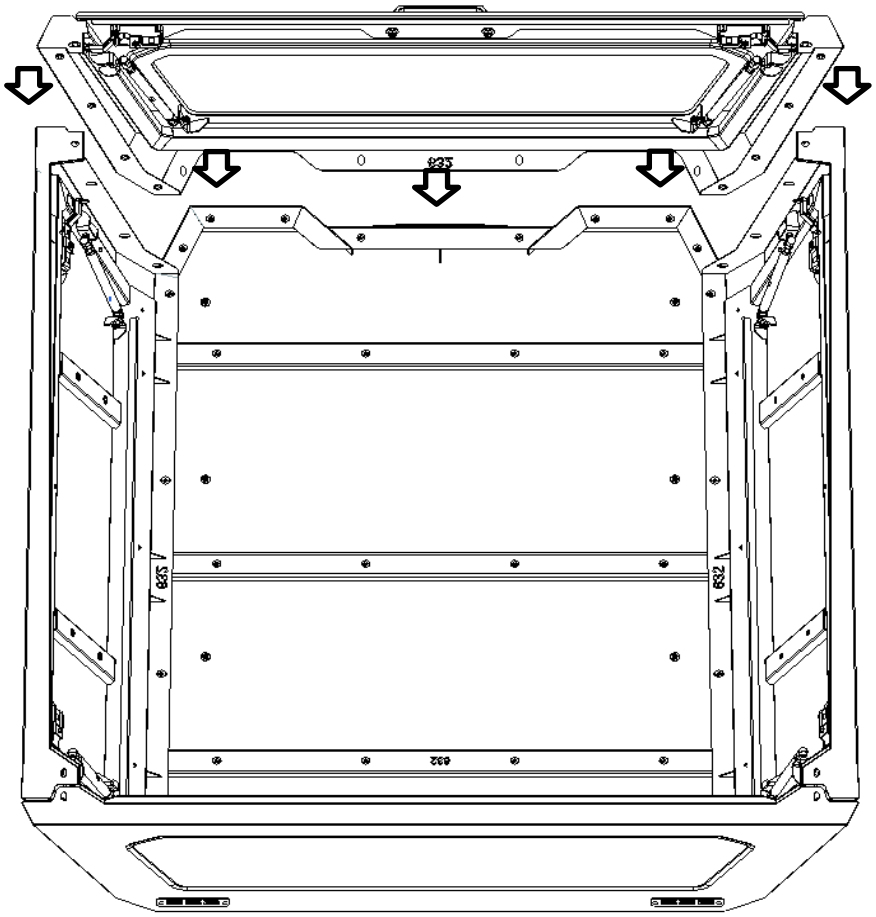

X16

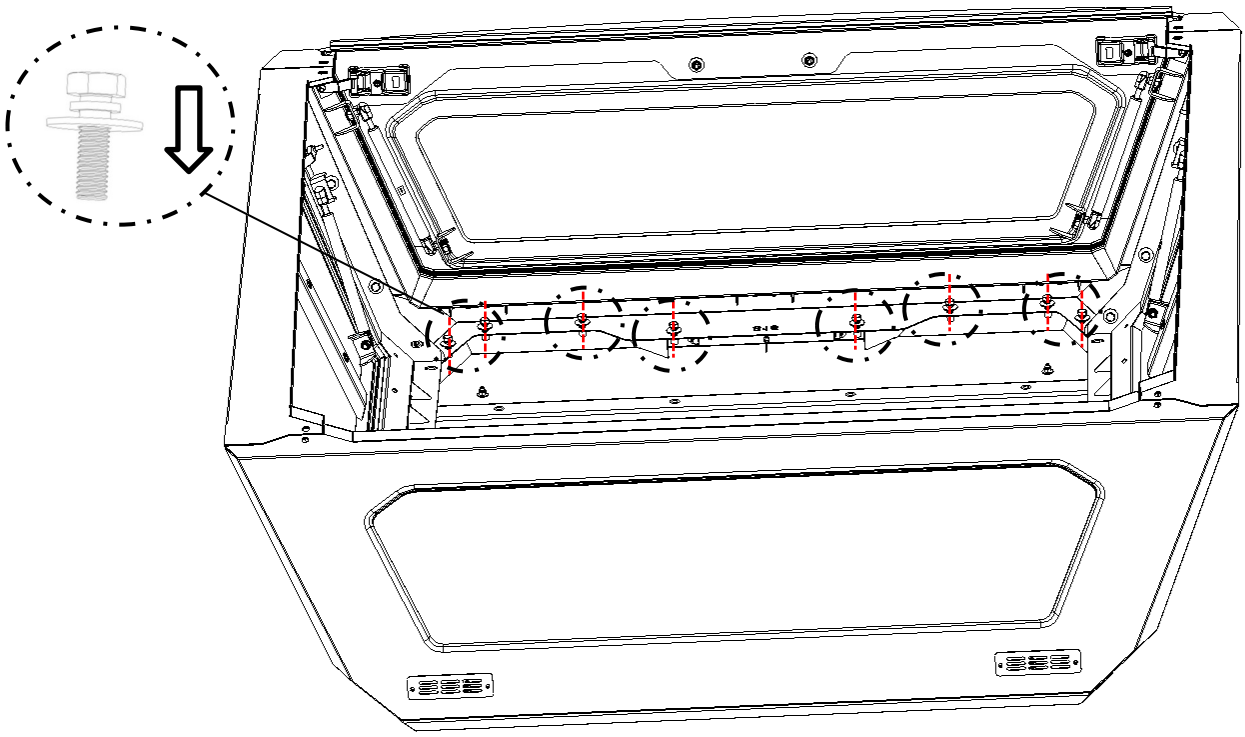

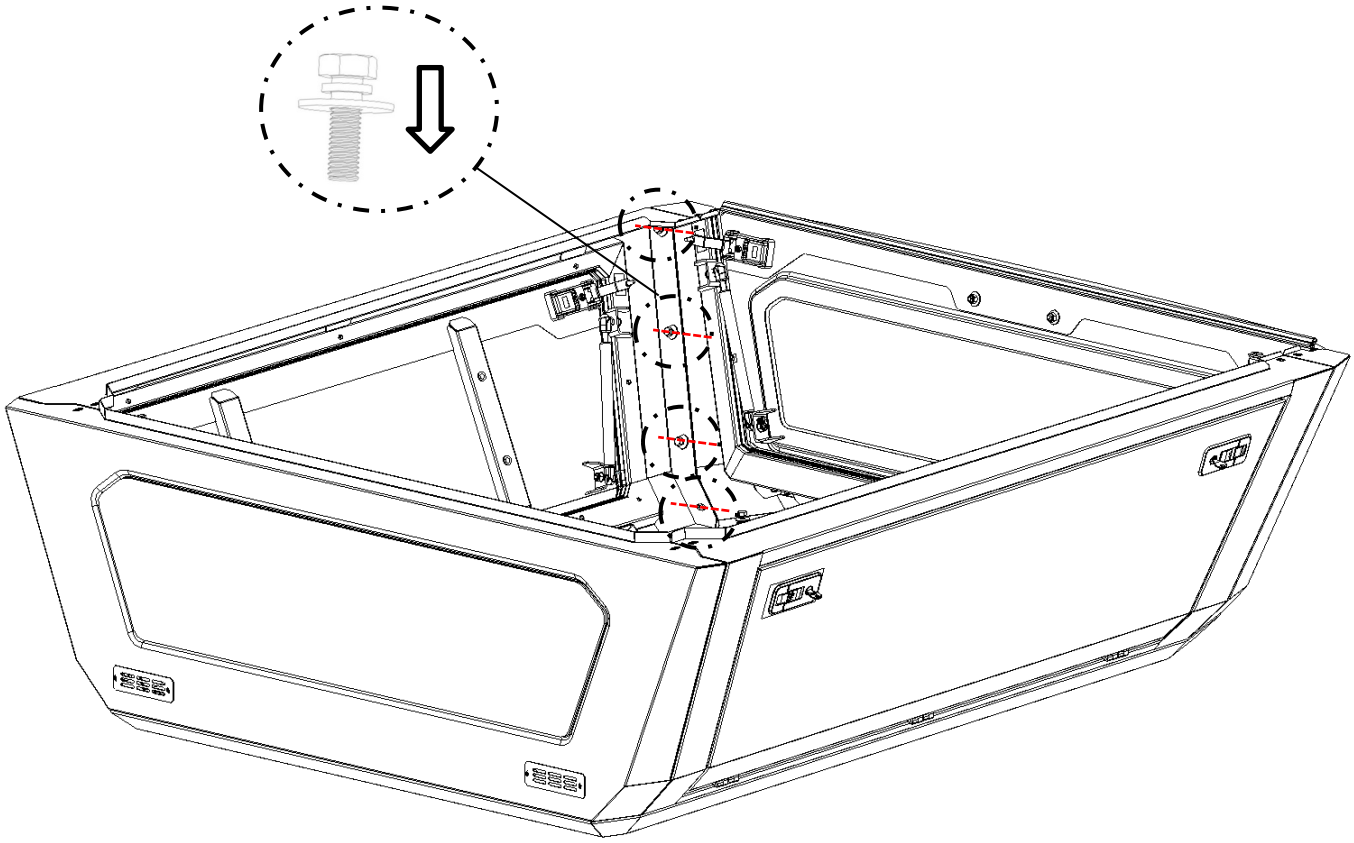

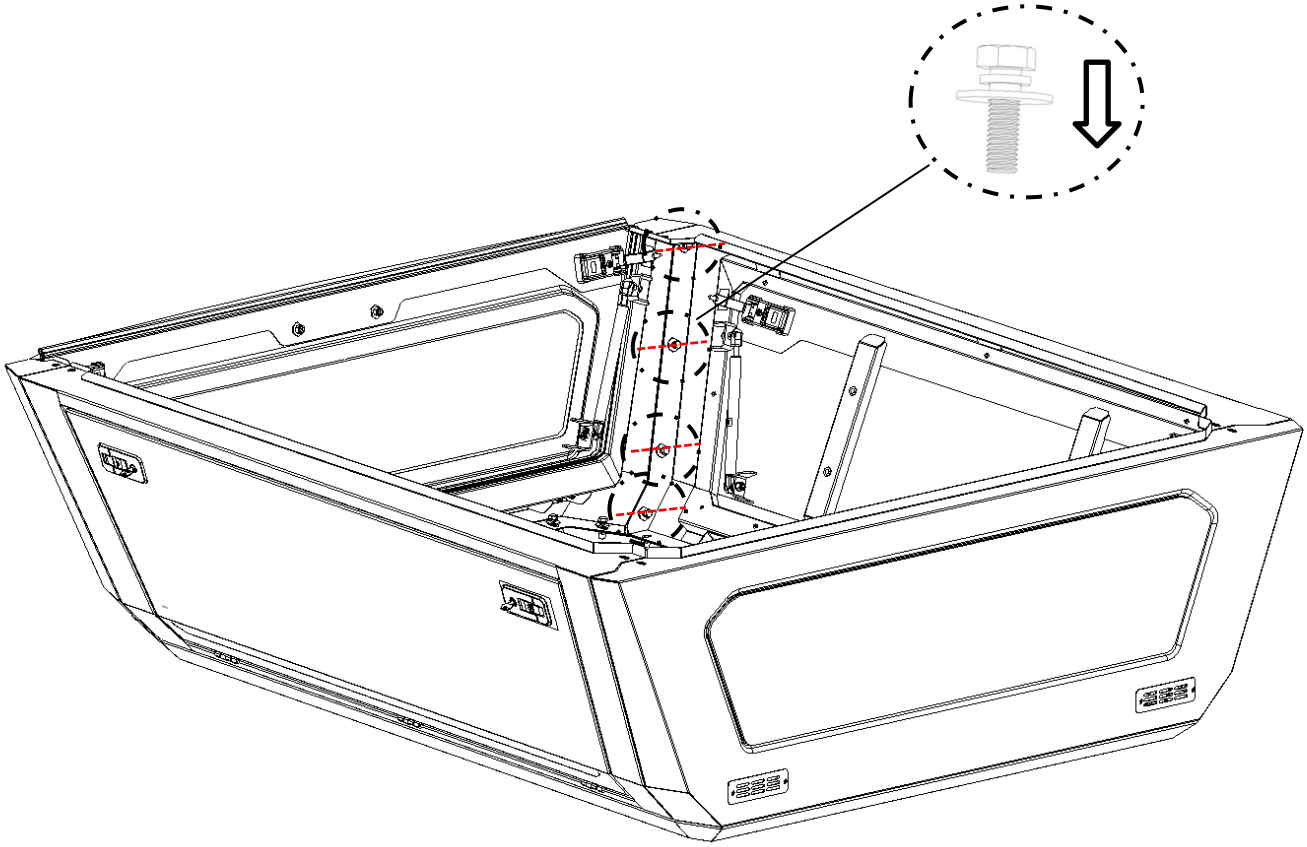

Step 5

Adjust the gap between each part to be even. Make sure the edge of each part is aligned. Tighten the bolt of left part and right part, and then tighten the bolt of top part.

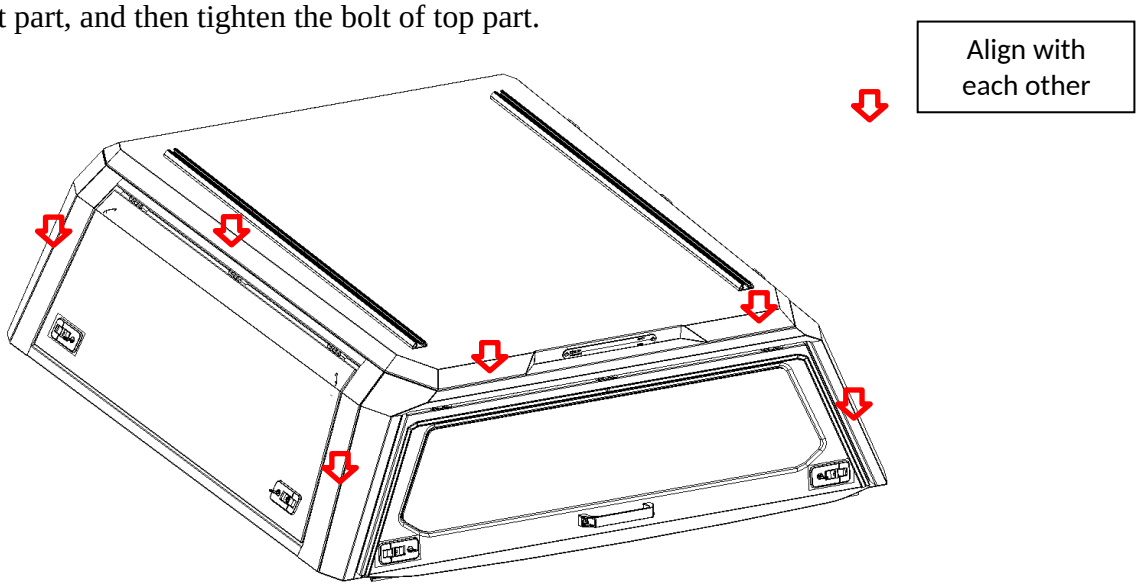

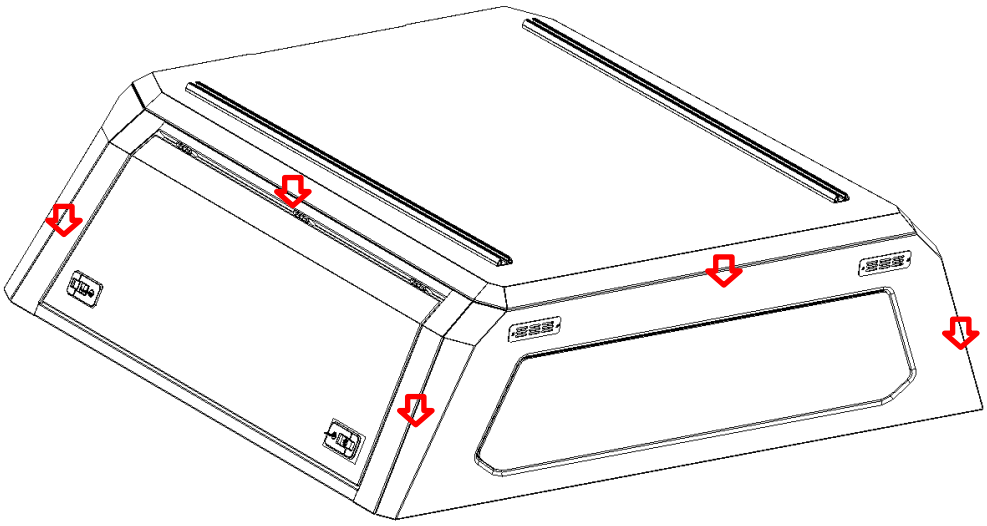

➡ Tighten 16* hex bolt group of left part and right part first

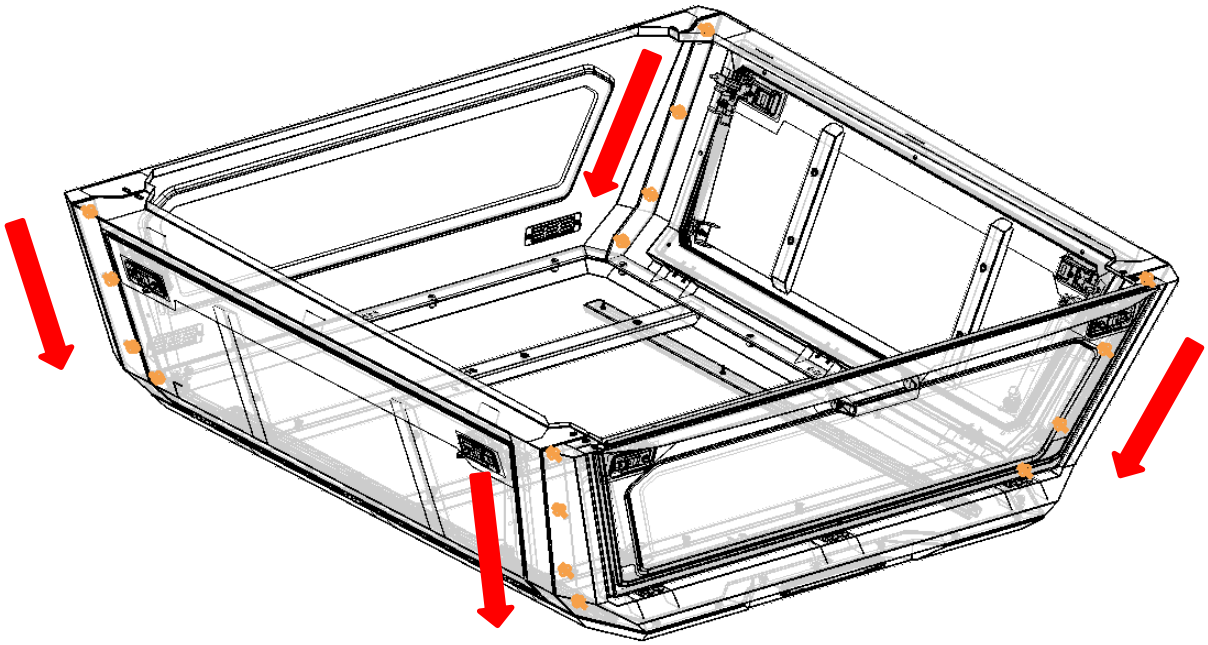

en tighten 20* hex bolt group of the top part

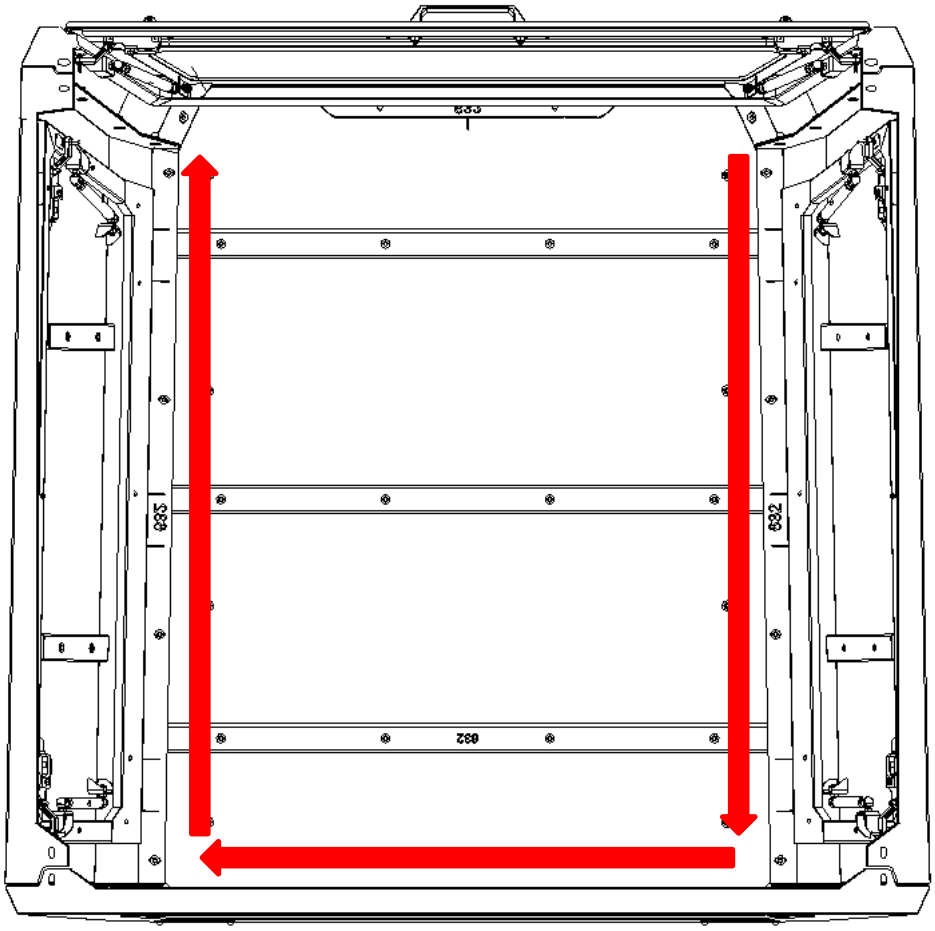

Step 6

Clean the bottom part of the assembled canopy. Take out 1* seal rubber and tear off the release paper. And then stick the seal rubber on the bottom of the canopy.

*Curve the seal rubber when it is on the corner.

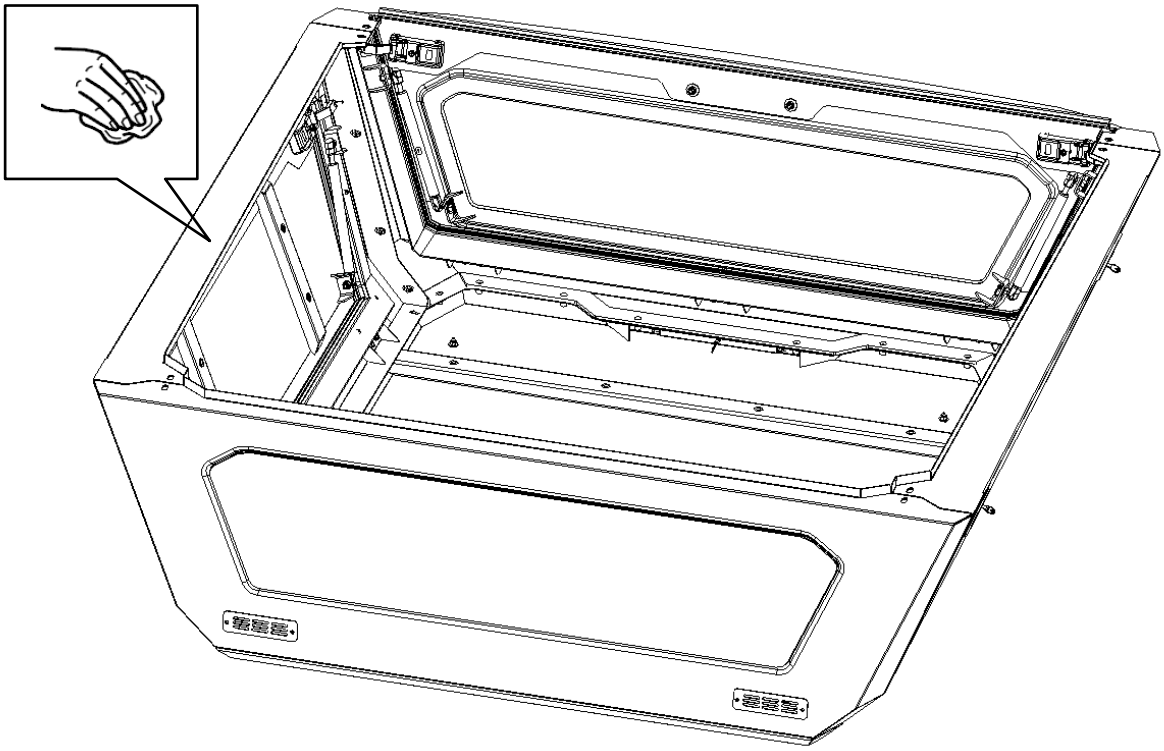

X 1

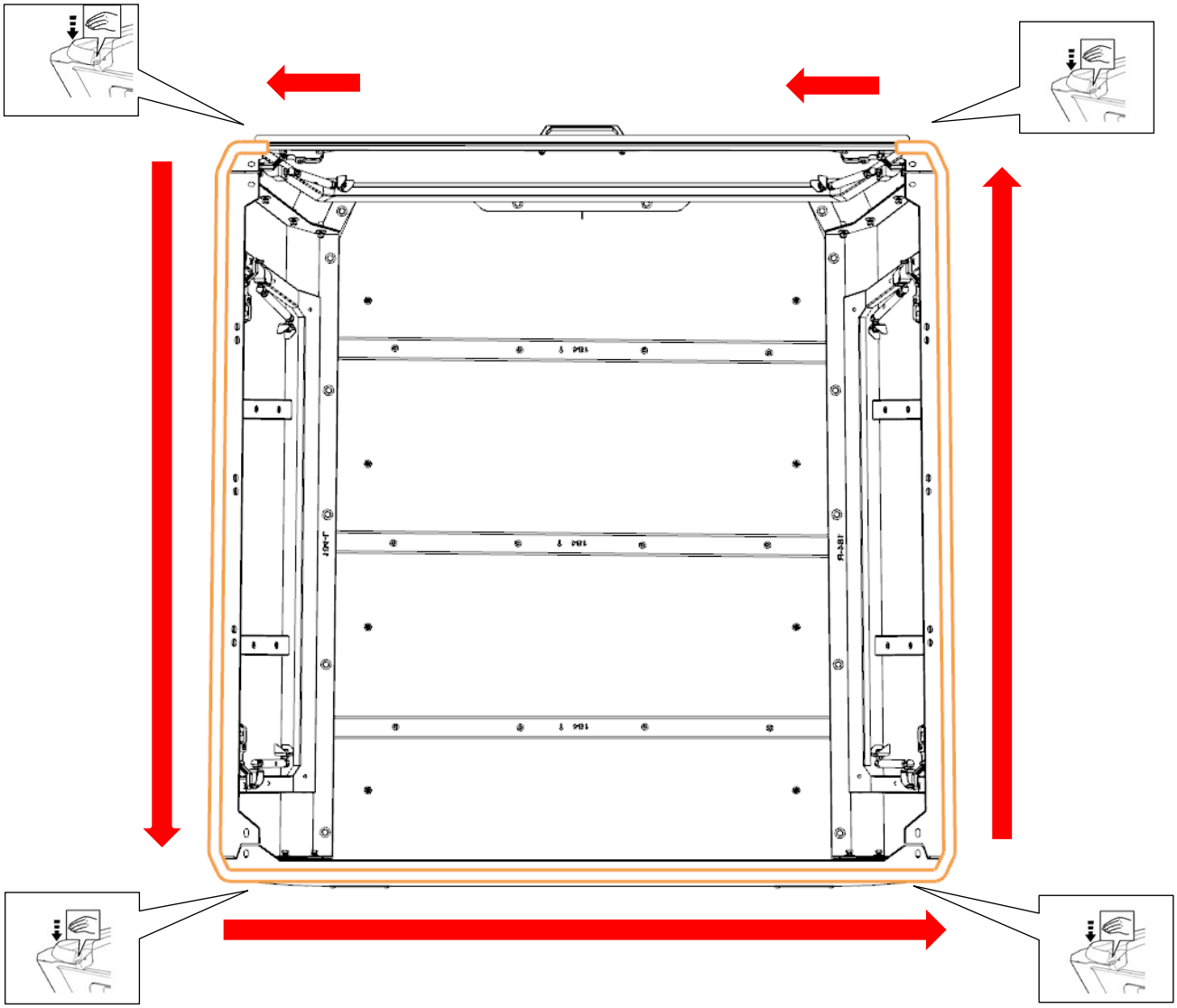

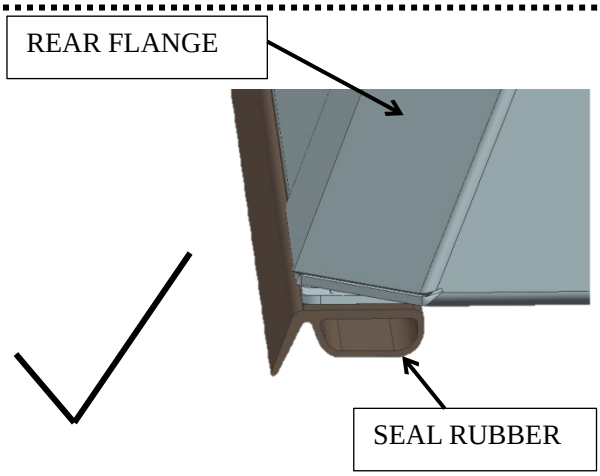

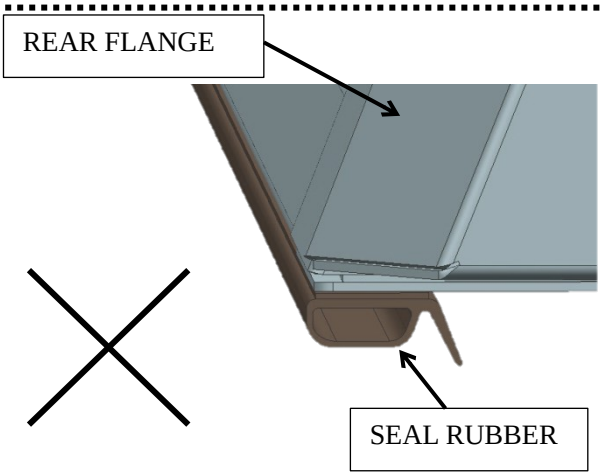

Step 7

Take out 1* front foam tape and tear off the release paper. And then stick the front foam tape on the groove of the bed. Cut off the excess parts.

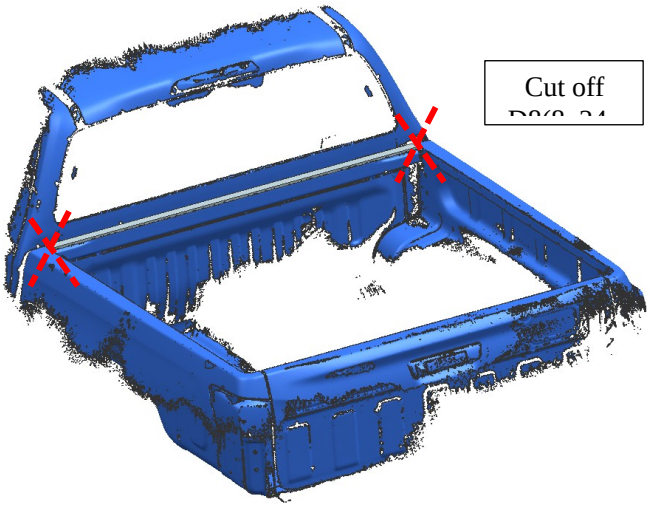

Fitting

① LARGE WASHER D8

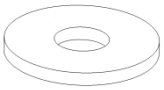

X 16

② HEXAGON NUTS M8

X 8

③ HEX BOLT GROUP M8_25

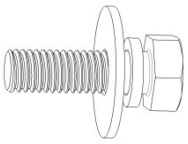

X 8

④ HEX BOLT M8_25

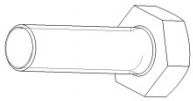

X 8

FRONT BRACKET (LEFT)

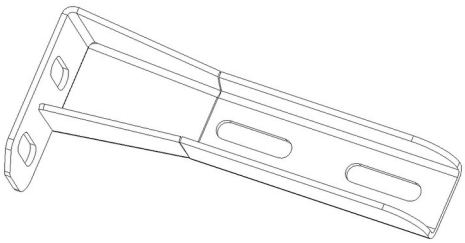

X 1

FRONT BRACKET (RIGHT)

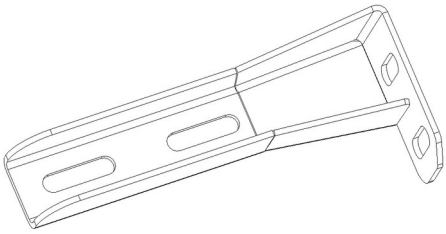

X 1

REAR BRACKET (LEFT)

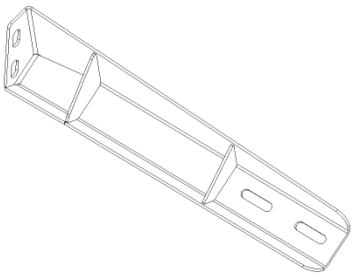

X 1

REAR BRACKET (RIGHT)

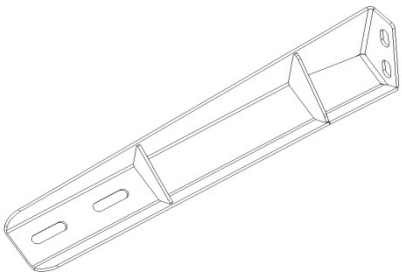

X 1

Tools

Rachet

Extensions

8mm&10mm Socket

8mm&10mm Wrench

Step 8

Match the front bracket (left) with the installation hole of the bed, and then install it on the bed by ③. Please repeat this step on another side.

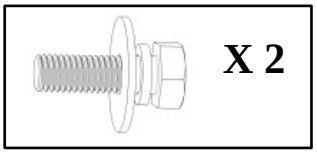

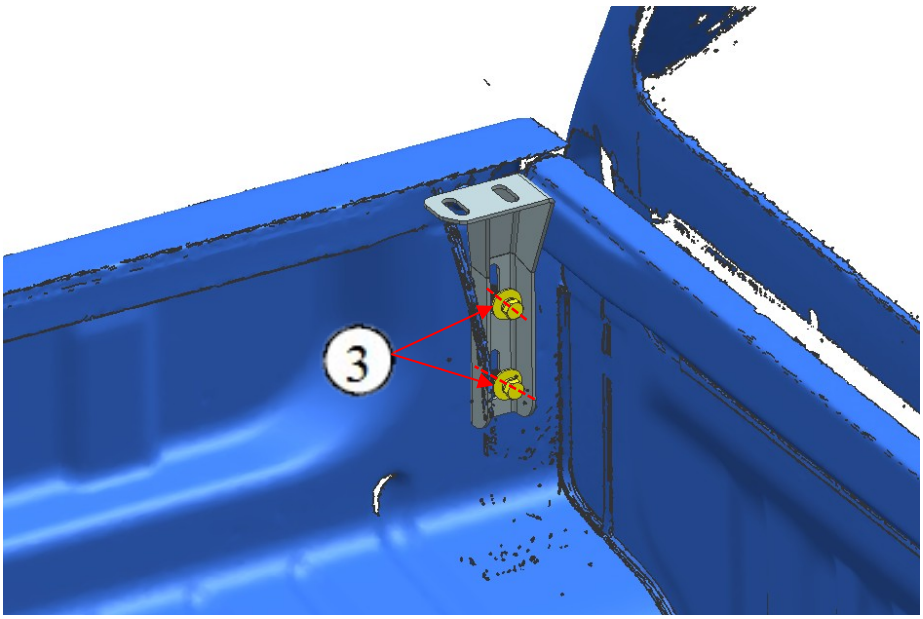

Step 9

Match the rear bracket (left) with the installation hole of the bed, and then install it on the bed by ③. Please repeat this step on another side.

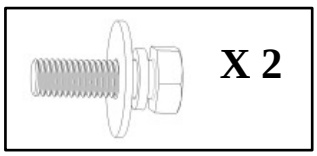

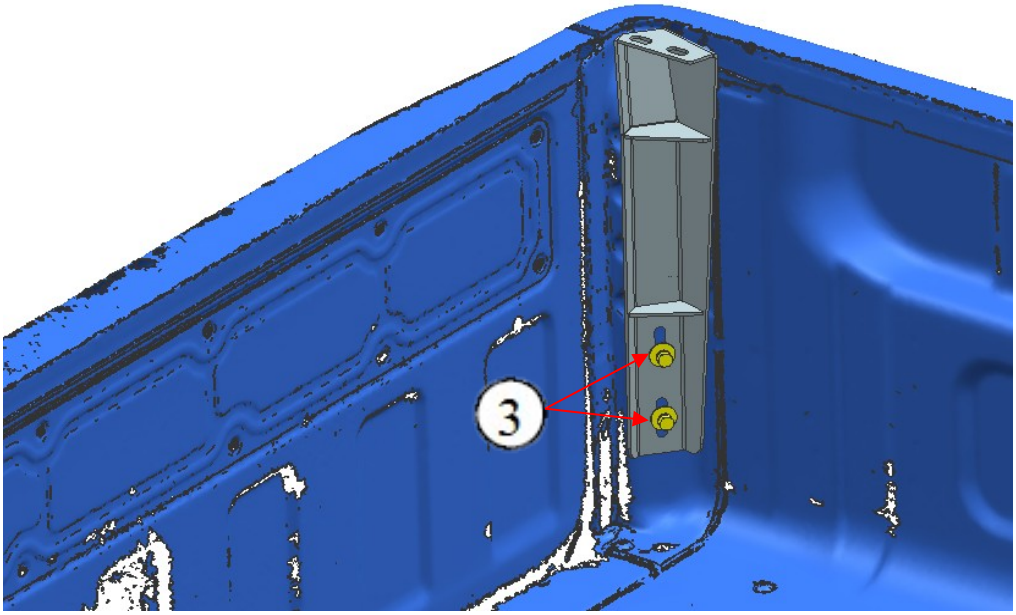

Step 10

Lift up the assembled canopy on the bed by at least 4 people.

*Don’t slide the canopy on the bed in case destruction to the seal rubber.

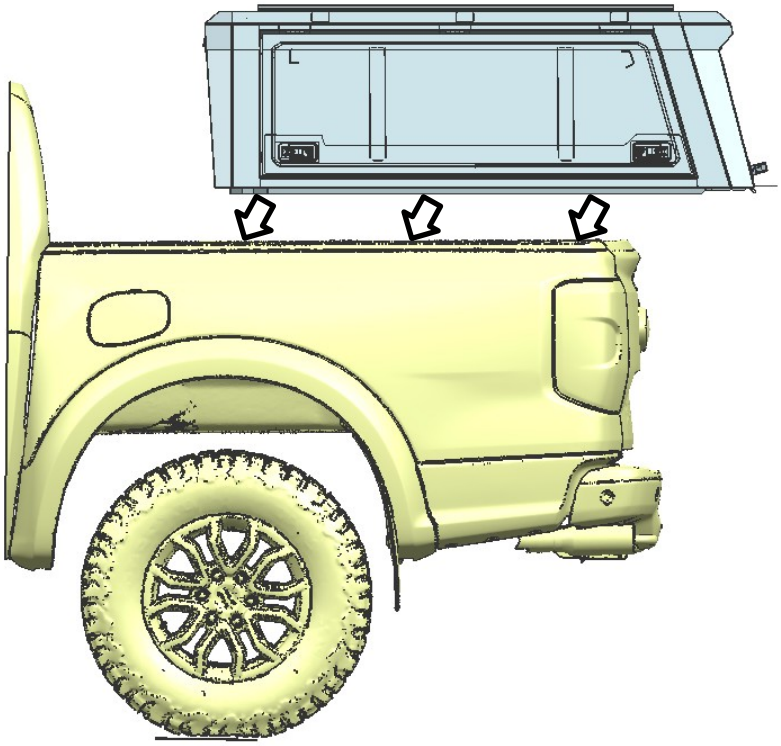

Step 11

Check the location of the canopy to put it on the center of the bed. Please note to leave space of at least 20mm between the canopy and the cab. Don’t push the canopy too close to the cab.

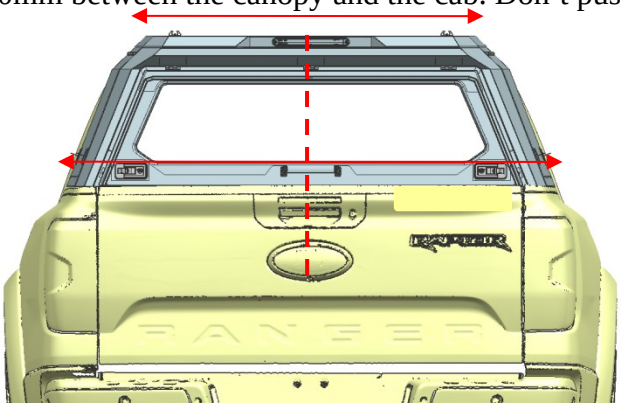

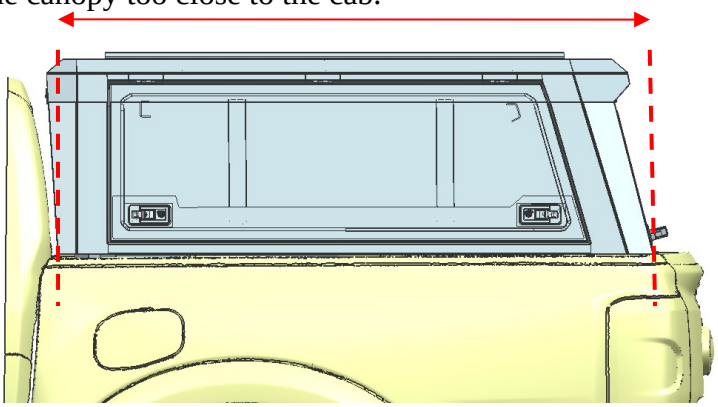

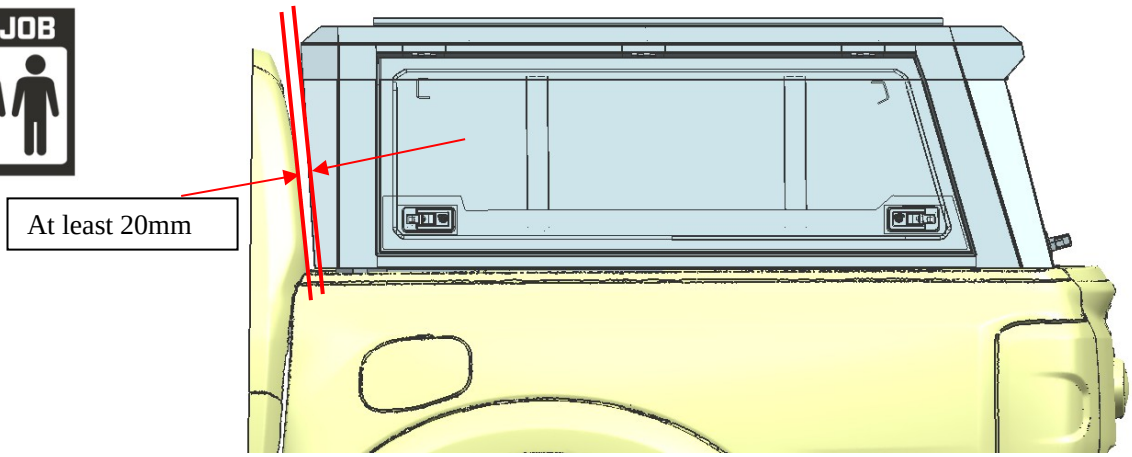

Step 12

Walk around the bed to check the installation of the seal rubber, make sure it is correctly pressed under the canopy

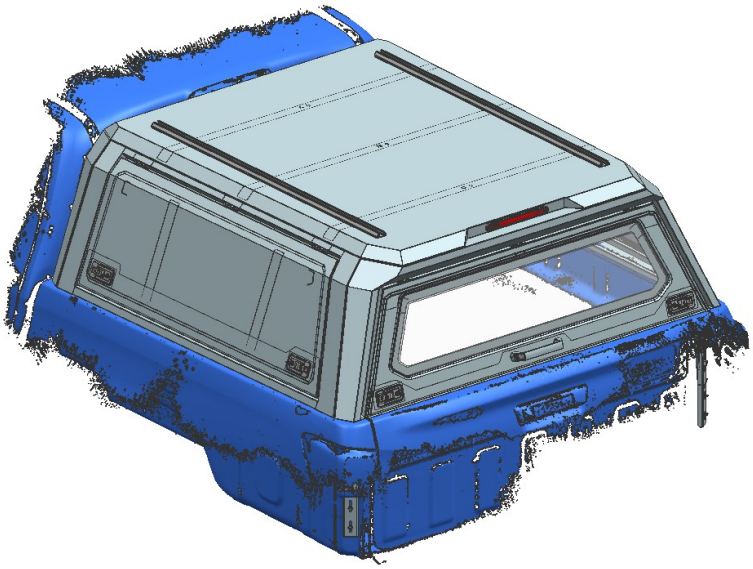

Step 13

Move the canopy to match the installation hole of the bottom part of canopy and the front bracket(left), and then install them by ②, ① and ④. Please repeat this step on another side

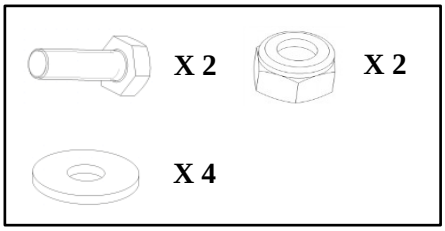

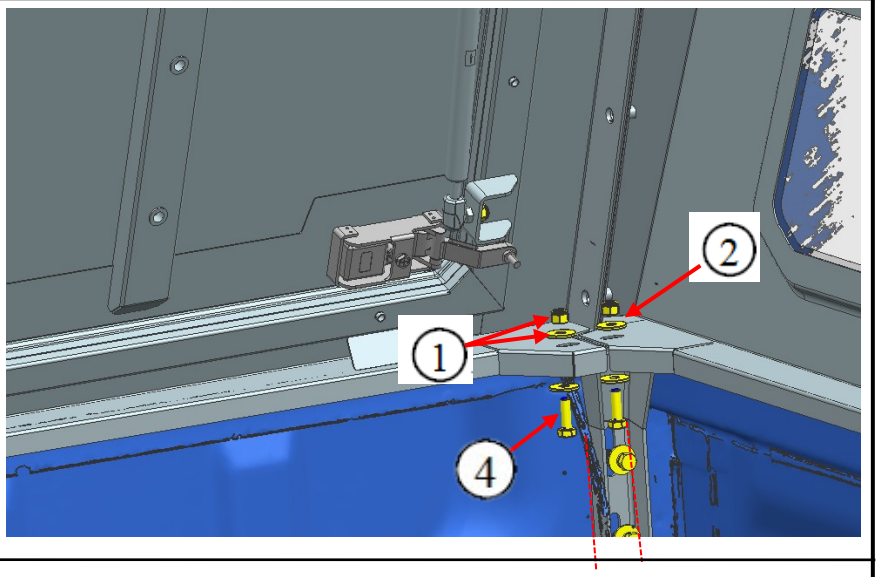

Step 14

Move the canopy to match the installation hole of the bottom part of canopy and the rear bracket (left), and then install them by ②, ① and ④.
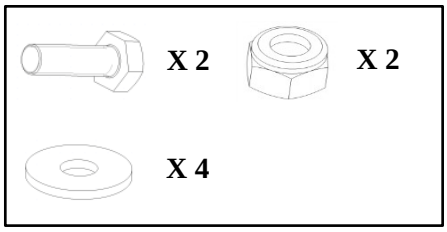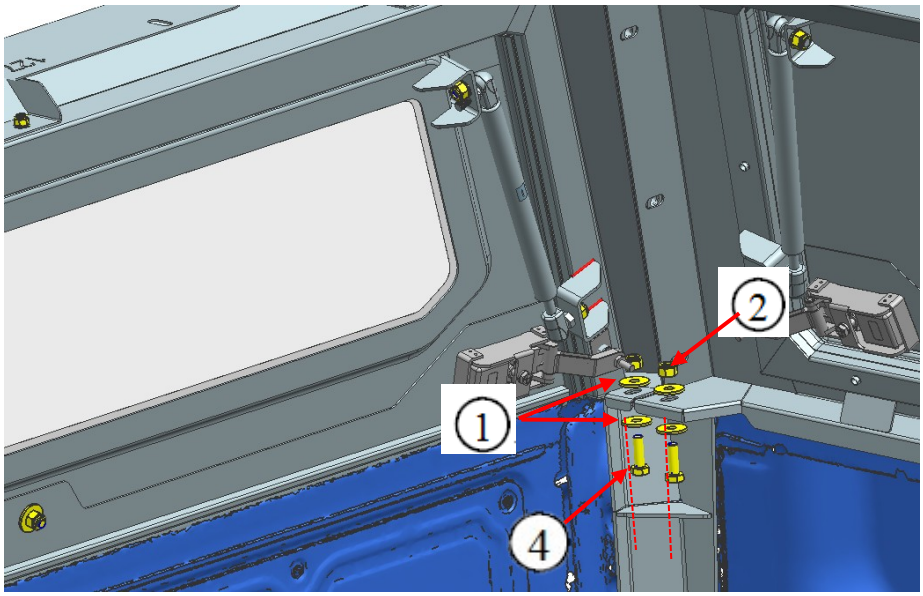
Please repeat this step on another side.