HR Rolling Cover Installation Instruction

(For FORD RANGER 2023)

OPERATION INSTRUCTION , CARE AND MAINTENANCE

Each HR Rolling Cover will have a DOP NUMBER on bottom of the right side rail, which is close to the tailgate. If any questions on products, please help to take photos of DOP NUMBER before contacting the factory staffs.

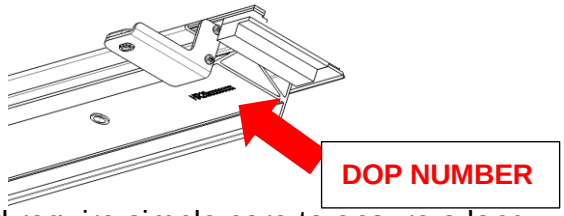

The tonneau covers are made from durable materials and require simple care to ensure a long life of performing well and looking great.

Roll Top cleaning

These stylish covers incorporate marine grade vinyl laminated on the top surfaces. Standard automotive soap and water used with a soft sponge or cloth is recommended for cleaning. Keep the surface dry to prevent water spots and unsure a rich dark finish.

Roll Top surface maintenance

Upholstery cleaner may be used to keep the vinyl surface clean and protected from the elements and will also remove any water spots that may have developed. Simply spray on and wipe dry for a beautiful, matte finish that protects your cover from road grime and dust.

⚠Do not clean the roll top surface with ethanol.

If any alkaline liquid or diesel fuel sprayed on surface of roll top, please clean it as soon as possible.

Clamps and brackets checking

It is recommended that you periodically check that the cover is securely attached to your truck bed, normally recommend that check it every 3 months. Inspect the clamps and brackets to ensure they were properly installed and have not come loose or knocked out of adjustment during operation. Covers that are used with high frequency or that are subject to the vibrations and impact from rough roadways can cause the cover to require adjustment.
Fastening the long bolt on the bracket until the side rail reach horizontal status.

Slam Latches operation checking

It is recommended that you periodically inspect and service the latched on the end of the roll top. Clean away any excess dirt or grime and use a spray lubricate. Ensure the latches move freely in and out to properly engage the side rail and provide proper performance with optimum security. Be careful not to overspray the cover. Wipe away any excess around the latch location.

⚠Do not attempt to drive with the cover in the partially open position!

When you are driving, the cover must be closed. Or roll the top towards the CAB and buckle it up.

Before Installation

Please read the instruction completely for easy installation, which will also help you to avoid scratches or other potential damages to your appealing car.
Please periodically check and retighten all the hardware and clean the investment for a refresh look.
The figures here are for reference only and may have differences with the actual product you received, however they share the same assembly way.

PART LIST

A 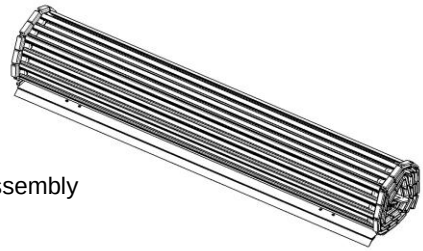 Roll top assembly	**B** Side rail (L) 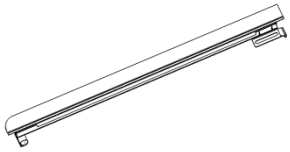
	C Side rail (R) 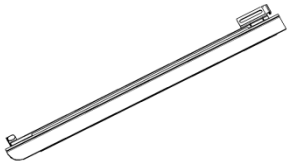
1 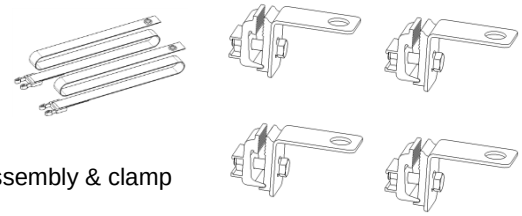 Strap assembly & clamp	**2** Foam seal
3 Strap buckle 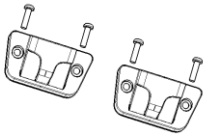	**4** 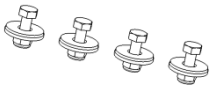 Kit for fixing roll top
5 Tape Primer	**6** 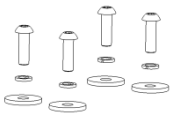 Front & rear long brackets (Rear bracket is optional) 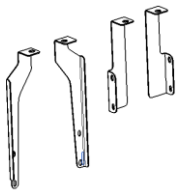

Tools and materials needed

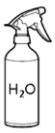

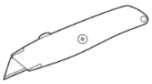

Installation Steps

⚠NOTICE： **If your truck bed equipped with an over rail bedliner, please remove it.**

(That would be fine for under rail bedliner)

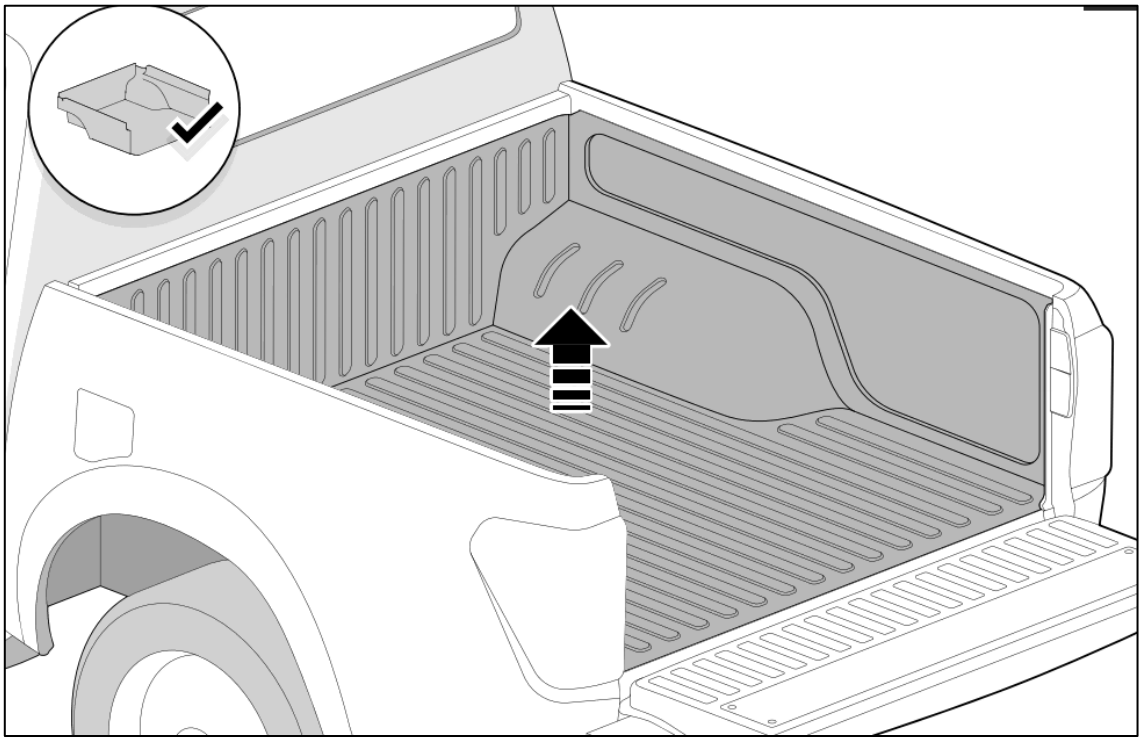

1. **Cleaning the truck bed and margin by water X, dismantling the other unnecessary part for clean and tidy.**

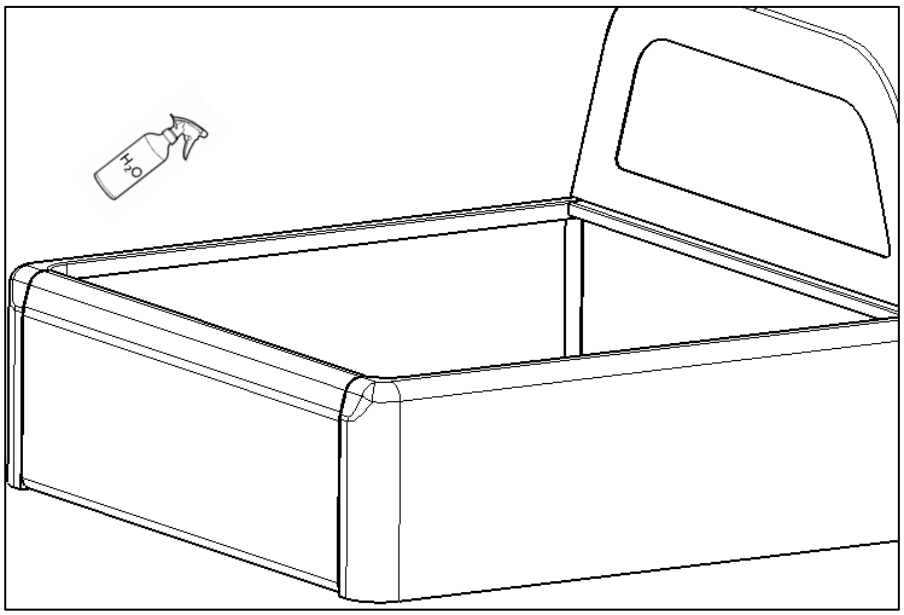

2. **Install the ② bulkhead seal to the top of the bulkhead, and then trim the extra part.**

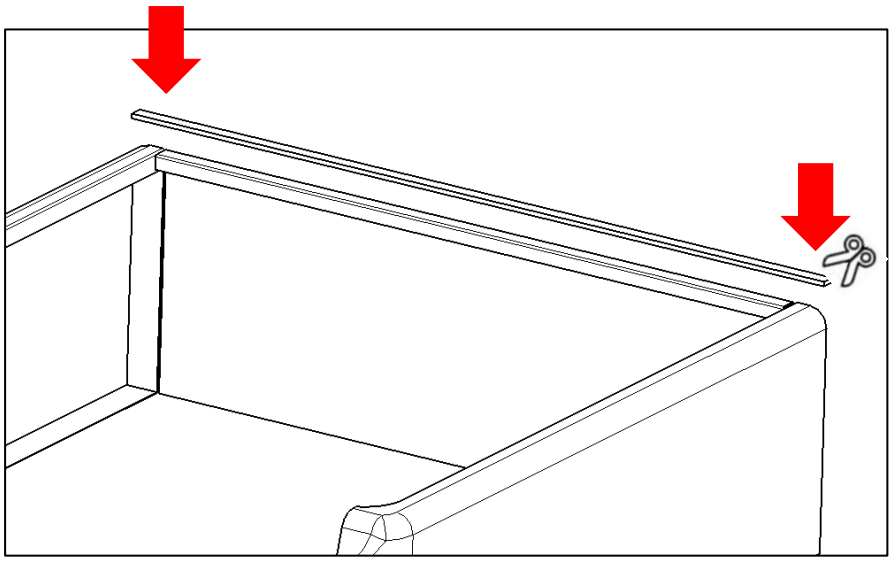

3. Install Ⓑ&Ⓒ side rails on truck bed

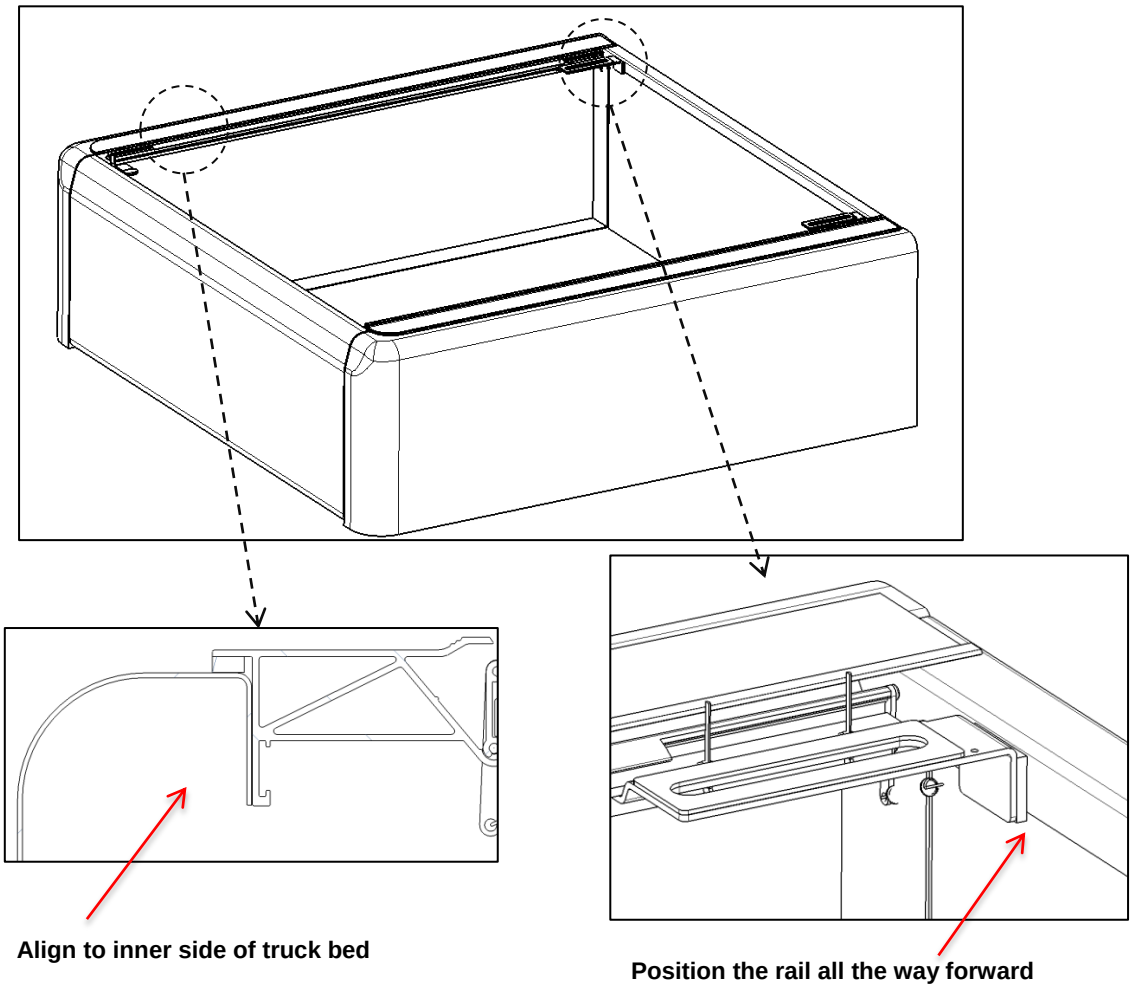

Align to inner side of truck bed

Position the rail all the way forward towards the cab of vehicle.

4. Install Ⓑ&Ⓒ side rails with ①clamp kit.

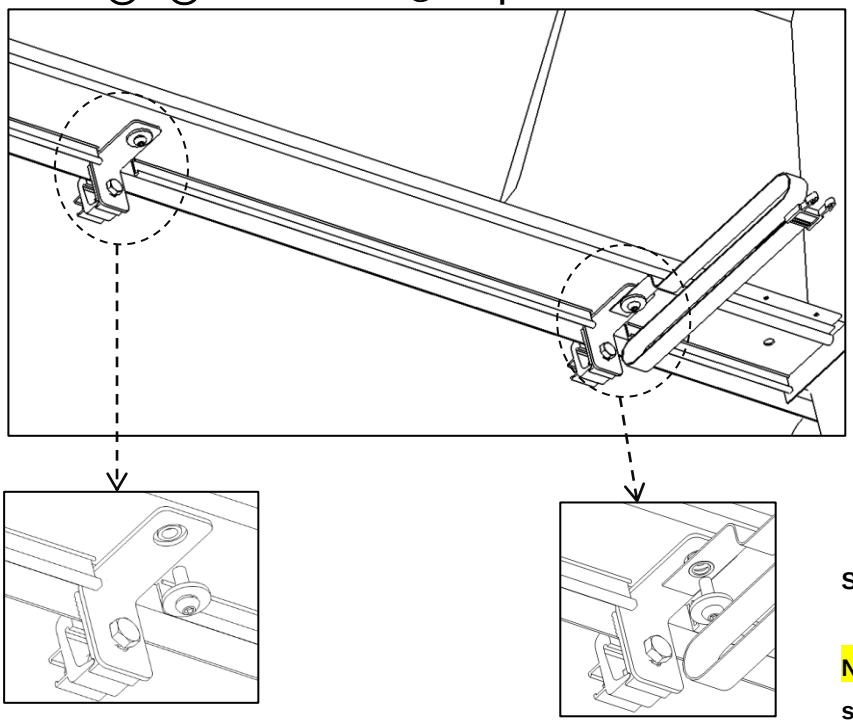

Slide the clamps into side rail,

Notice: the one with strap assembly should be moved to the front part.

5. Apply downward pressure to the rail when tightening the clamps.

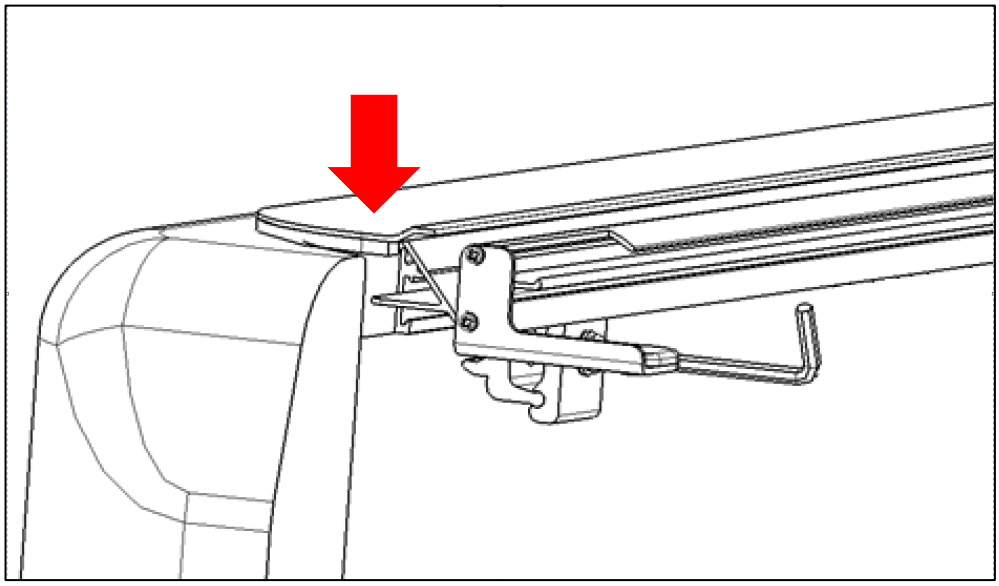

Install ⑥ brackets on side rail ,do not tighten the bolts

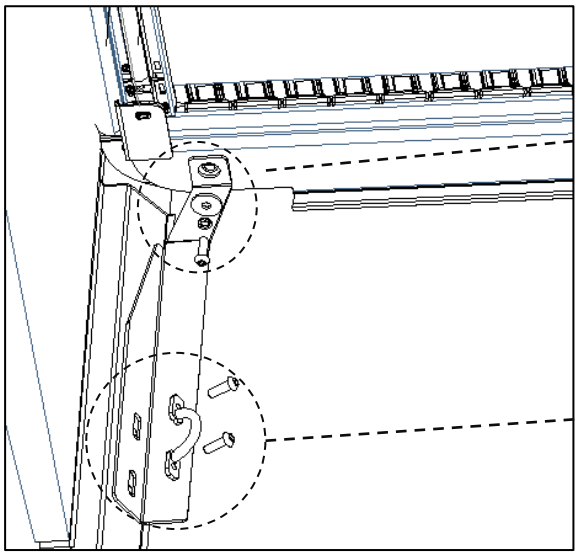

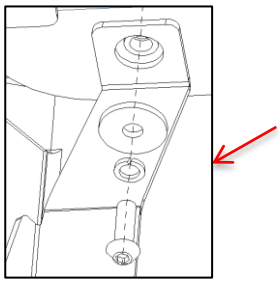

a. Connect with side rail, fasten the bolt

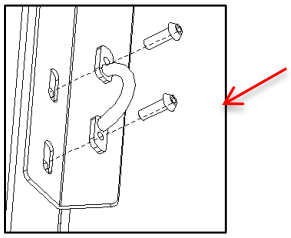

b. Apply downward pressure and install on truck bed with original bolts.

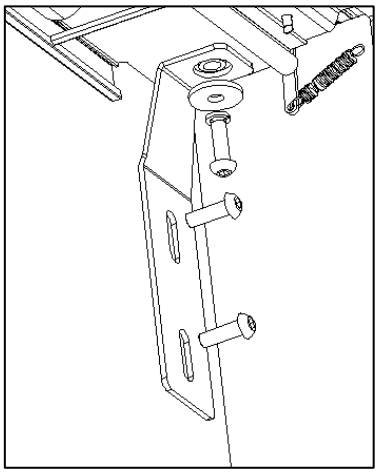

6. Put Ⓐ the roll top on Ⓑ\Ⓒ side rails, adjust it to proper position.

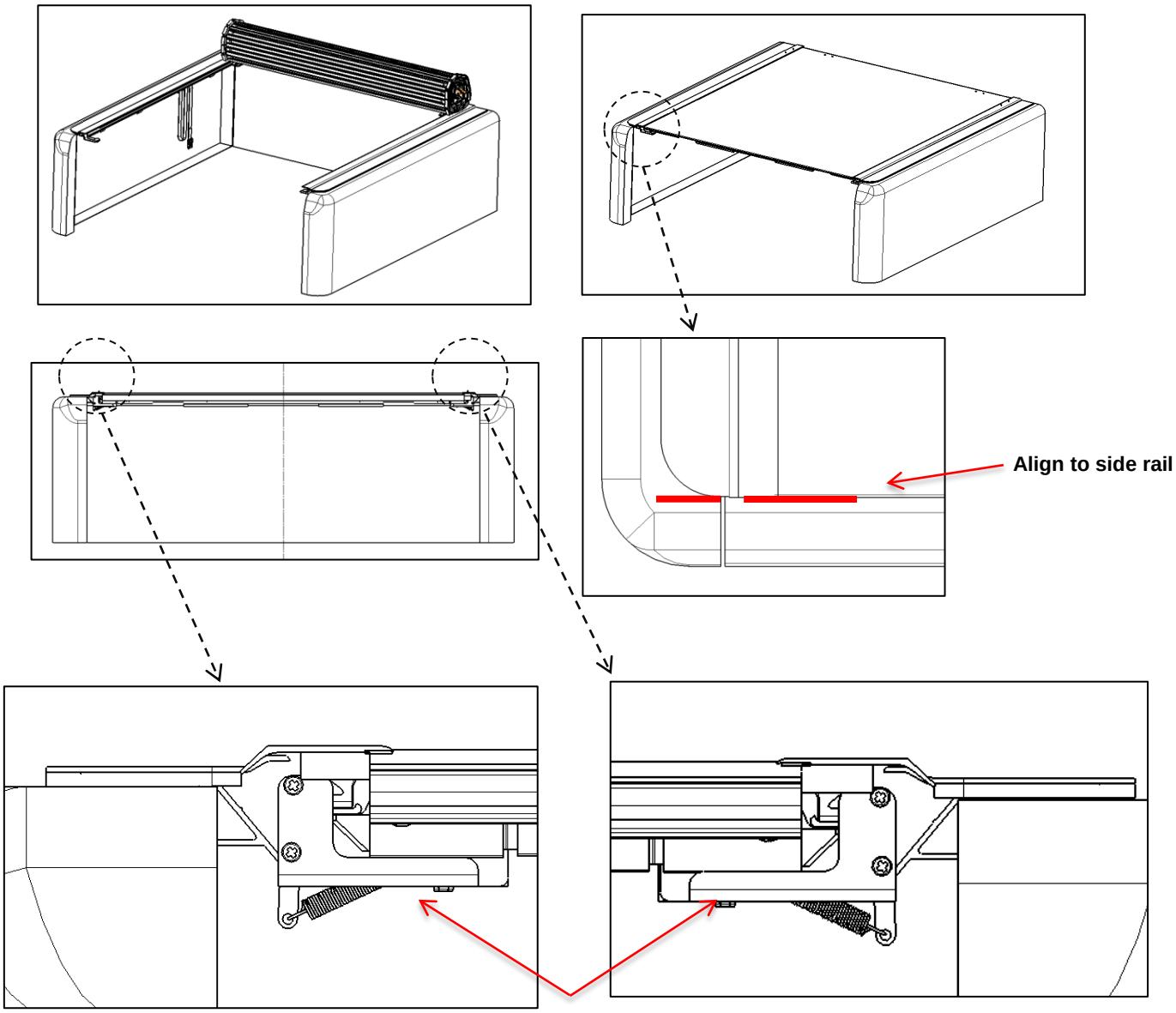

Make sure roll top cover in middle position, gap from end cap to both side rails should be same.

7. Roll the cover from back to front, make sure the roll top keep the same position between the rails.

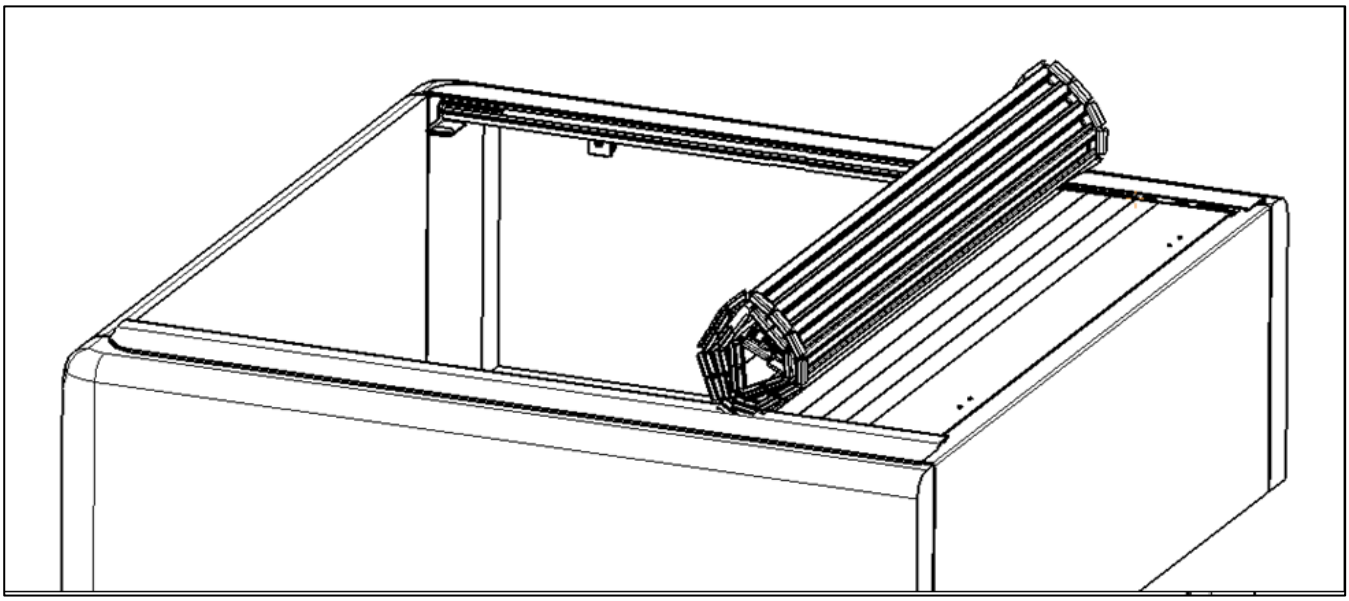

8. Roll the cover to front , slide ④the bolt at the bottom of front slat. Then fasten the nuts.

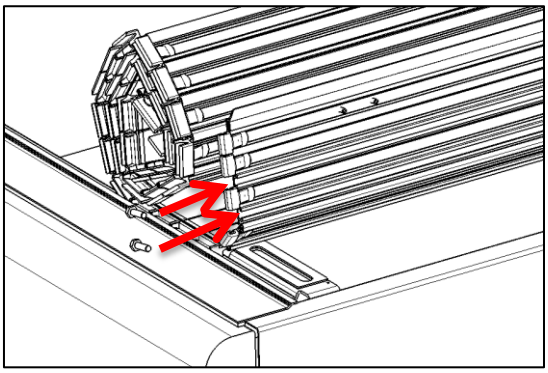

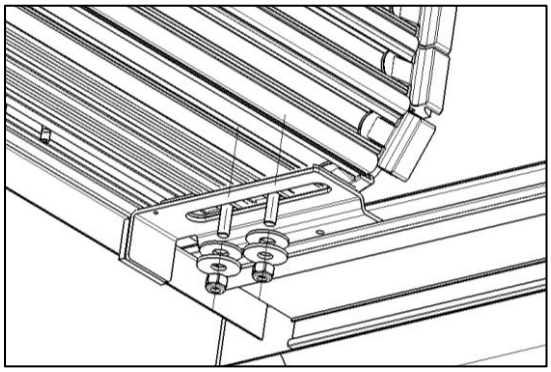

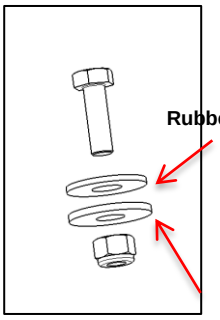

9. Rolling the cover from front to back, to see if it's running freely on rails, also confirm cover on proper position as we mentioned above.

If Yes, then tighten the bolts on Step 8.

If NO, then repeat Step 6.

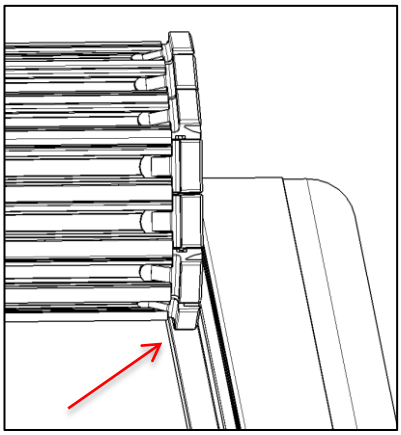

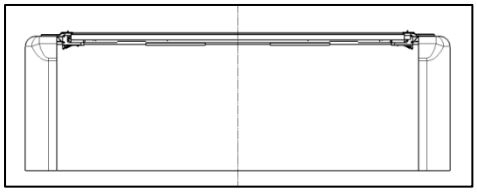

Roll top cover in middle position

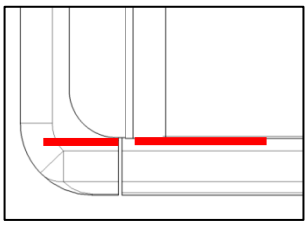

Align to side rail

Runs freely in the opening

10. Stick the magnetic seal at the bottom of side rubber strip.

- **After fastening the bolts, wipe the ⑤tape primer at the bottom of side rubber strip. Then roll the cover from front to back,**
- **Remove the paper on magnetic seal; apply downward pressure on side rubber strip to let the magnetic seal stick at the bottom of side rubber strip.**

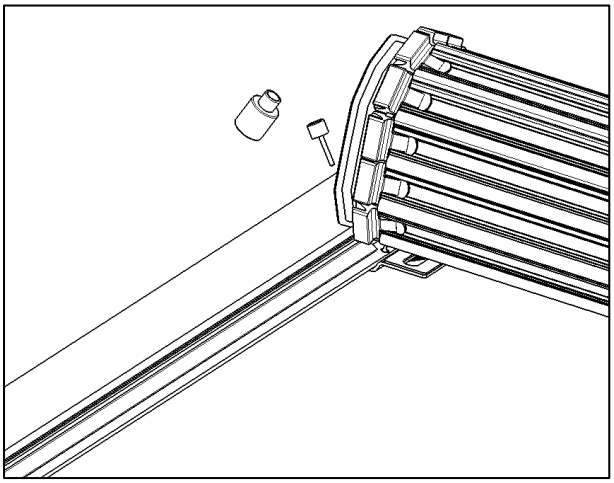

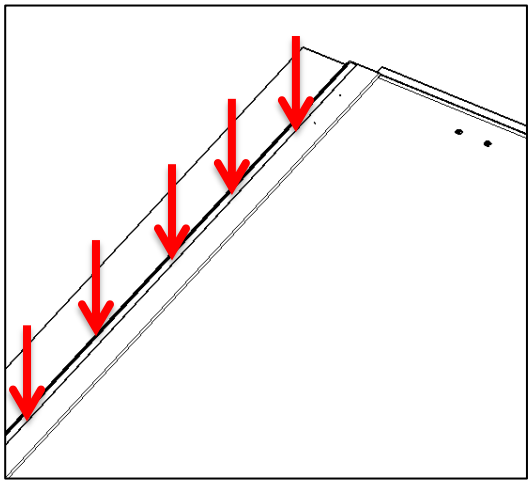

11. Install ③strap buckle on Ⓐroll top assembly.

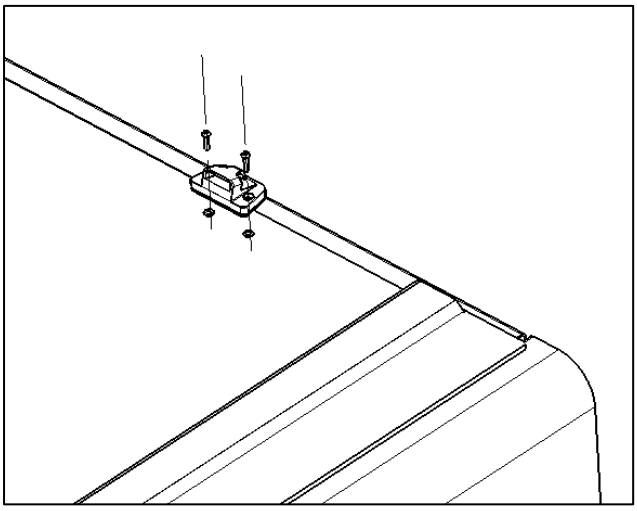

12. To drive with your cover in the open position, simply make use of the provided tie down straps. Roll the cover open and insert the strap clips into the buckles.

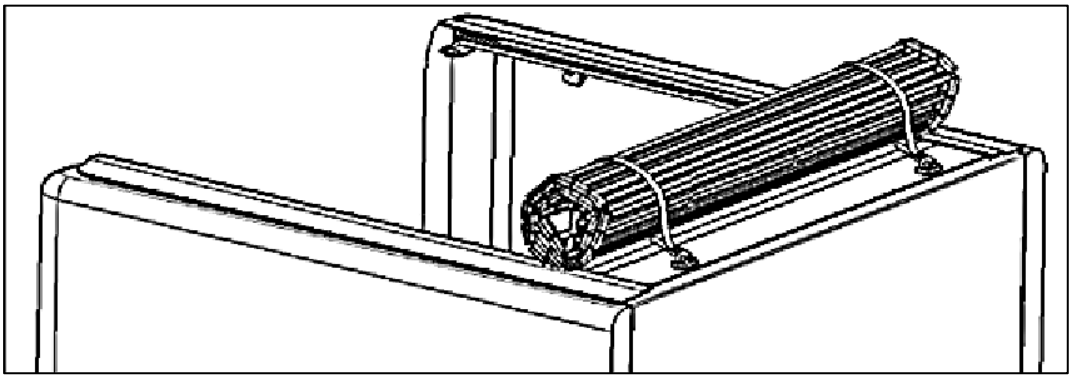

Finish.
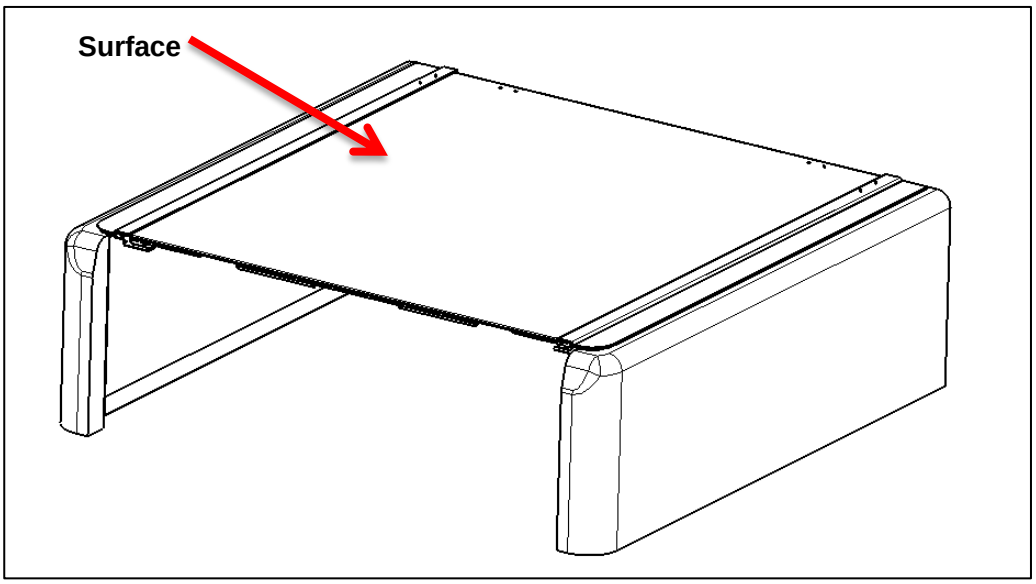
⚠**Notice：If any alkaline liquid spray on surface of the roll top assembly, please clean it with water as soon as possible. And wipe it dry with a cloth.**